JACK 杰克

快速服务100%

H5 系列零件手册

H5 Series Parts Manual

1.机壳、外装分组件/Machine frame & cover components

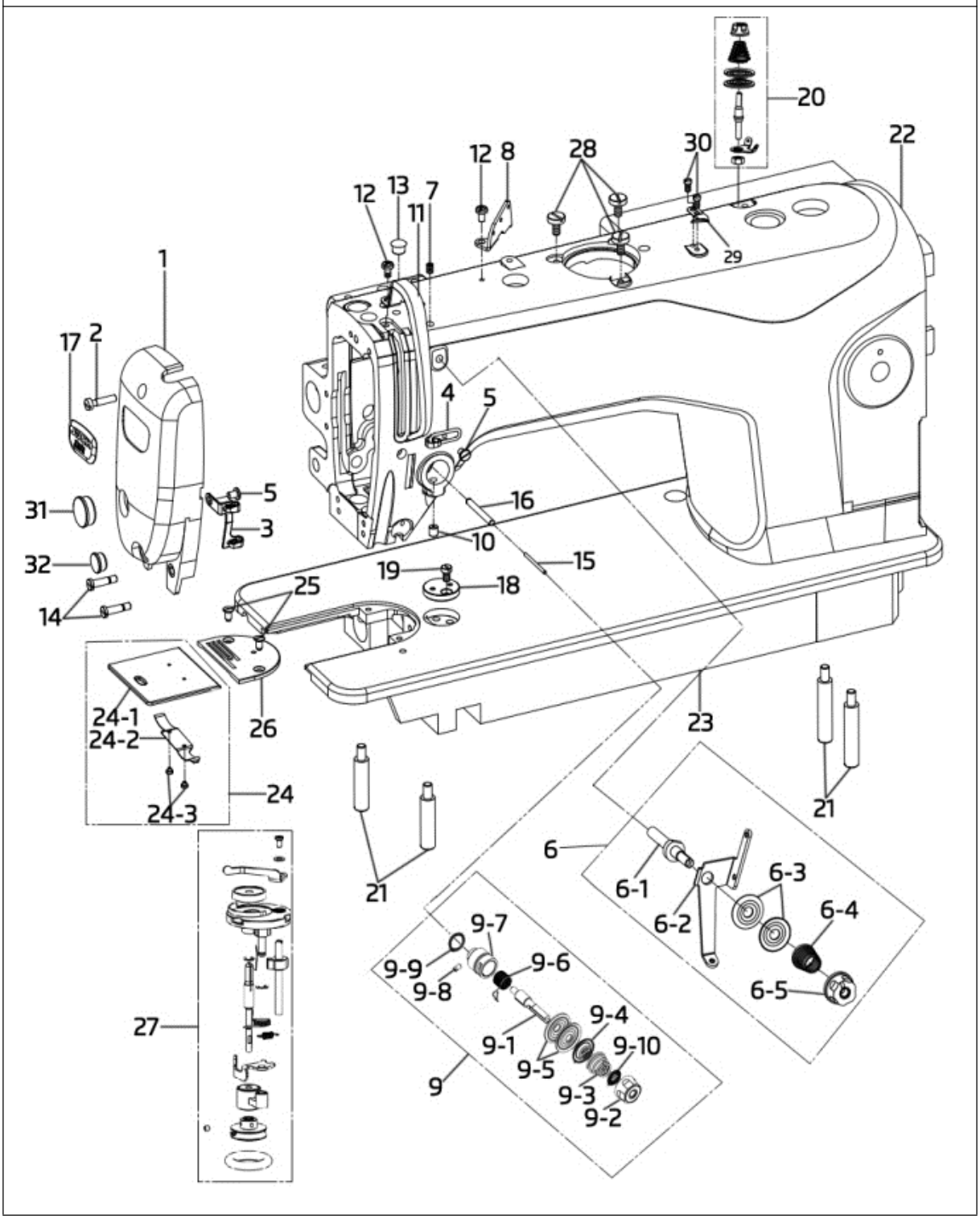

1.机壳、外装分组件/Machine frame & cover components

序号 NO.	公司件号 Part NO.	名称 PartName	零件描述 Description	数量 Number					
				-3	-12	XB	ZD	ST	H5+
1	304713	面板	panel	1		1	1	1	1
	930000235	面板(12mm)	Panel (12mm)		1				
2	201S11025	面板螺钉	Panel Screw SM11/64"×40	1	1	1	1	1	1
3	14713003	面板线勾	Panel thread guide	1	1	1	1	1	1
4	10113004	右线钩	Panel thread guide (right)	1	1	1	1	1	1
5	101S11007	螺钉 SM11/64×40×	Screw SM11/64×40×6	2	2	2	2	2	2
6	1411300400	小夹线器组件	Small thread tension assy	1	1	1	1	1	1
6-1	13812066	过线板	Thread tension guide plate	1	1	1	1	1	1
6-2	13810008	小夹线器螺柱	Thread tension bolt	1	1	1	1	1	1
6-3	11212004	小夹线板	Thread tension disk	2	2	2	2	2	2
6-4	11227001	小夹线弹簧	Thread tension spring	1	1	1	1	1	1
6-5	138S16019	小夹线器螺母	Thread tension nut	1	1	1	1	1	1
7	113S14002	小夹线固定螺钉	Set Screw	1	1	1	1	1	1
8	13512004	三孔线勾	3-hole thread guide	1	1	1	1	1	1
9	11471300100	夹线组件	Thread tension assy	1	1	1	1	1	1
9-1	1147NS3000	夹线螺钉	Thread tension Screw	1	1	1	1	1	1
9-2	141S16013	夹线螺母	Thread tension nut	1	1	1	1	1	1
9-3	14227024	夹线弹簧	Thread tension spring	1	1	1	1	1	1
9-4	10112006	松线板	Tension releasing board	1	1	1	1	1	1
9-5	14112015	夹线板	Thread tension disk	2	2	2	2	2	2
9-6	114727001	挑线簧	Takeup spring	1	1	1	1	1	1
9-7	13513006	夹线调节座	Thread tension retainer	1	1	1	1	1	1
9-8	135S15002	夹线调节座螺钉	Screw	1	1	1	1	1	1
9-10	10112007	夹线螺母止动板	Thread tension nut locking plate	1	1	1	1	1	1
9-11	001050	O 型圈	O Ring 14.5x1.5	1	1	1	1	1	1
10	136S14002	螺钉 SM15/64×28	Screw SM15/64×28	1	1	1	1	1	1
11	14712018	挑线杆防护罩	Thread tade-up lever cover	1	1	1	1	1	1
12	101S11004	螺钉 SM3/16"X28	Screw SM3/16"X28 X7	2	2	2	2	2	2
13	10122005	挑线连杆销螺孔塞	Take-up link pin screw plug	1	1	1	1	1	1
14	135S11047	面板螺钉 SM11/64×	Panel Screw SM11/64×40	2	1	2	2	2	2
15	14726002	松线钉	Thread release pin	1	1	1	1	1	1
16	13613002	松线棒	Thread release bar	1	1	1	1	1	1
17	13837002	A4-0182 商标牌	A4-0182 trademark	1	1	1	1	1	1
18	13812111	卷边器座	Beader pedestal	1	1	1	1	1	1
19	101S11025	螺钉 SM11/64×40×	Screw SM11/64×40×7	2	2	2	2	2	2
20	1361300800	绕线夹线器	Bobbin winder thread tension	1	1	1	1	1	1
21	101S12001	底板支柱	Base plate pillar	4	4	4	4	4	4
22	100968	H5 机壳	H5 frame	1	1	1	1	1	1
23	100767	底板	Base plate	1	1	1	1	1	1
24-1	13515002	推板	Slide plate	1	1	1	1	1	1
24-2	13512007	推板簧	Slide plate spring	1	1	1	1	1	1
24-3	101S11019	螺钉 SM3/32×56	Screw SM3/32×56 L=2	2	2	2	2	2	2
25	104S17002	螺钉 SM11/64×40	Screw SM11/64×40 L=5	2	2	2	2	2	2
26	13515001	针板	Needle plate	1			1		1
	13515004	针板	Needle plate					1	

1.机壳、外装分组件/Machine frame & cover components

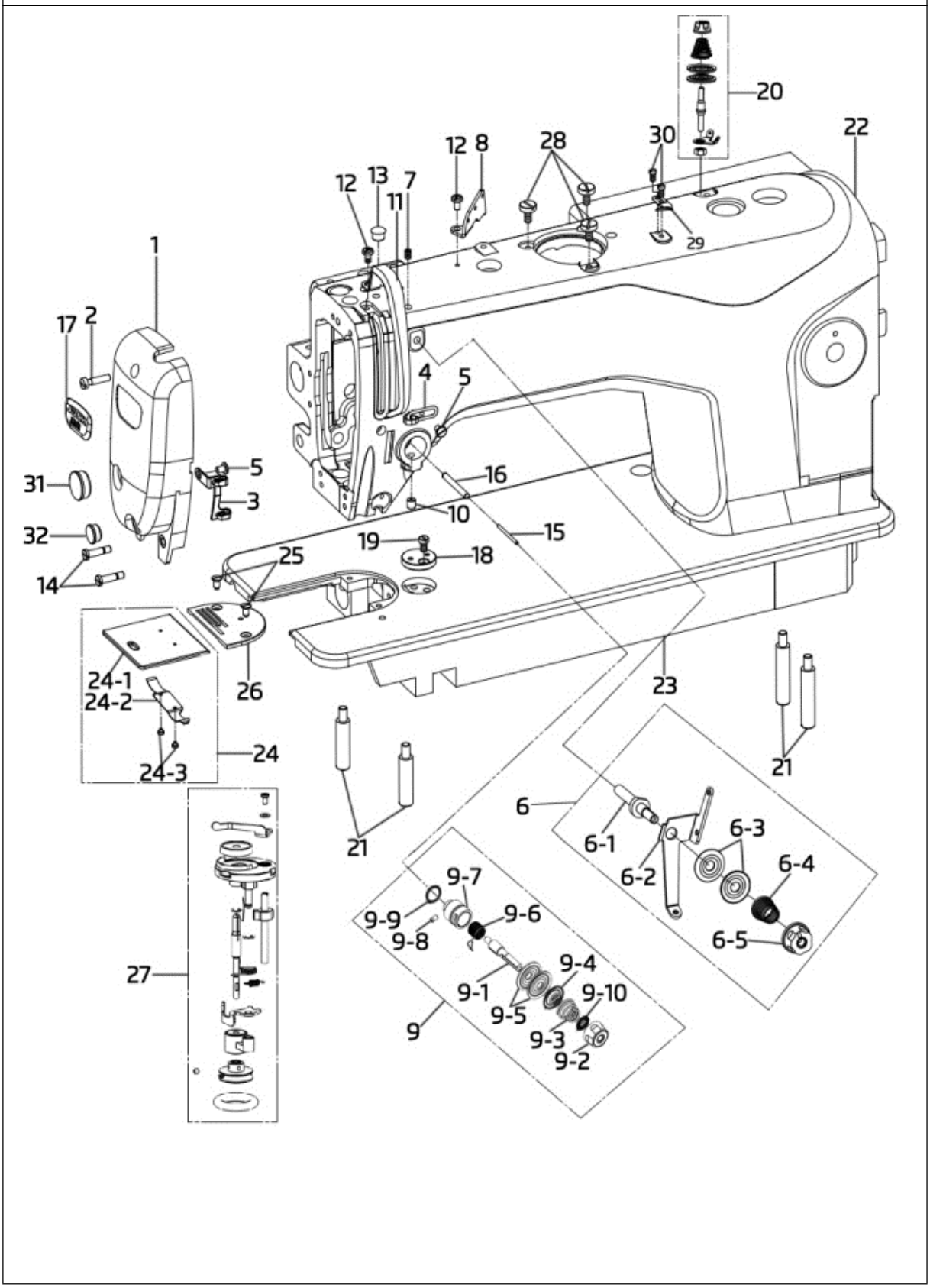

1.机壳、外装分组件/Machine frame & cover components

序号 NO.	公司件号 Part NO.	名称 PartName	零件描述 Description	数量 Number					
				-3	-12	XB	ZD	ST	H5+
	13515005	针板	Needle plate			1			
	13515003	针板（12mm）	Needle plate（12mm）		1				
27	1473100100	绕线器组件	Bobbin winder assy	1	1	1	1	1	1
28	114s11003	螺钉 3/16-28 L=10	Screw 3/16-28 L=10						
29	11419001	切线刀	THREAD CUTTER	1	1	1	1	1	1
30	114S11015	螺钉 SM9/64×40	SCREW SM9/64×40 L=6	2	2	2	2	2	2
31	13522001	面板橡皮塞（φ19）	Rubber plug(φ19)	1	1	1	1	1	1
32	13522002	面板橡皮塞（φ11.8）	Rubber plug(φ11.8)	1	1	1	1	1	1

2.上轴挑线分组件/Main shaft & thread take-up components

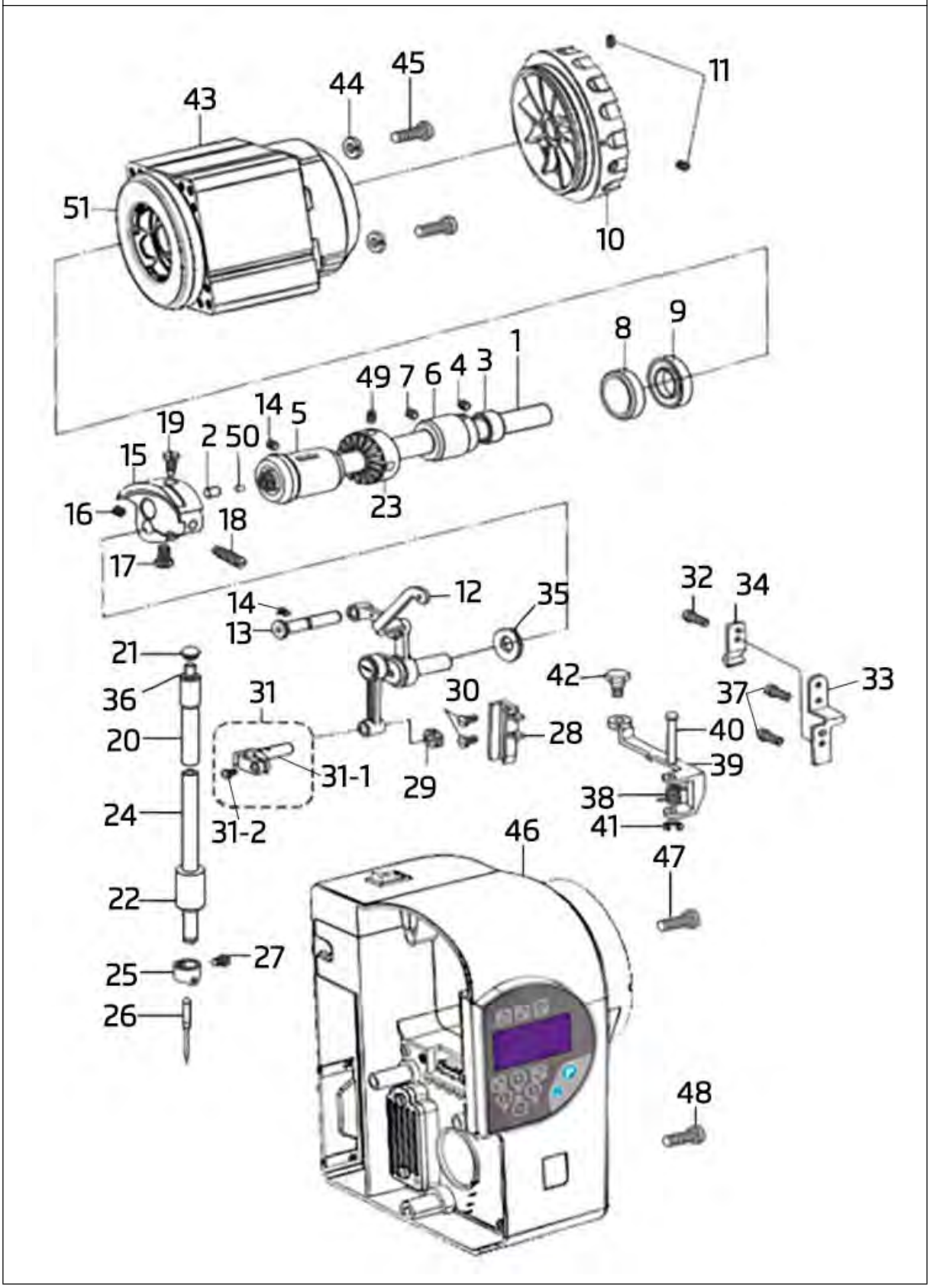

2.上轴挑线分组件/Main shaft & thread take-up components

序号 NO.	公司件号 Part NO.	名称 PartName	零件描述 Description	数量 Number					
				-3	-12	XB	ZD	ST	H5+
1	14702011	上轴	Main shaft	1	1	1	1	1	1
2	10122012	上轴橡皮塞	Rubber plug	1	1	1	1	1	1
3	10108003	上轴紧圈	Shaft washer	1	1	1	1	1	1
4	101S15002	螺钉 SM1/4×40×6	Screw SM1/4×40×6	2	2	2	2	2	2
5	13603023	上轴前轴套	Main shaft bushing,front	1	1	1	1	1	1
6	13503017	上轴中轴套	Main shaft bushing, middle	1	1	1	1	1	1
7	135S15006	螺钉 SM15/64×28	Screw SM15/64×28	1	1	1	1	1	1
8	13603027	上轴后套	Main shaft bushing,back	1	1	1	1	1	1
9	13522010	上轴后轴套油封组件	bushing,back oil seal assy	1	1	1	1	1	1
10	304714	主动轮	Capstan	1	1	1	1	1	1
11	S10009	主动轮螺钉 M6x8	Capstan Screw M6x8	2	2	2	2	2	2
12	1353800200	挑线杆组件	Thread take-up assy	1	1	1	1	1	1
13	13502003	挑线连杆铰链销	Thread take-up hinge pin	1	1	1	1	1	1
14	135S15009	螺钉 SM15/64×28	Screw SM15/64×28	1	1	1	1	1	1
15	13504001	针杆曲柄	Needle bar crank	1	1	1	1	1	1
16	101S15007	螺钉 SM1/4×40×8	Screw SM1/4×40×8	1	1	1	1	1	1
17	135S12001	螺钉 SM1/4×40	Screw SM1/4×40	1	1	1	1	1	1
18	101S15004	螺钉 SM9/32×28×16	Screw SM9/32×28×16	1	1	1	1	1	1
19	135S11002	螺钉 SM9/32×28	Screw SM9/32×28	1	1	1	1	1	1
20	14703006	针杆上衬套	Needle bar upper bushing	1	1	1	1	1	1
21	10122013	针杆上衬套橡皮塞	Upper bushing rubber plug	1	1	1	1	1	1
22	13503007	针杆下衬套	Needle bar lower bushing	1	1	1	1	1	1
23	14735001	驱动轮	BTW-DRIVING-WHEEL	1	1	1	1	1	1
24	13602002	针杆	Needle bar	1	1	1	1	1	1
25	13513011	针杆过线环	Needle bar thread ring	1	1	1	1	1	1
26	13517001	机针(DP×17 23#)	Needle(DP×17 23#)	1	1		1		1
	13517003	机针(DP×17 22#)	Needle(DP×17 22#)			1			
	11617002	机针(DP×5 14#)	Needle(DP×5 14#)					1	
27	101S11006	螺钉 SM1/8×44 L=4.5	Screw SM1/8×44 L=4.5	1	1	1	1	1	1
28	13609001	滑块槽	Slider trough	1	1	1	1	1	1
29	11409001	针杆接头滑块	Connection Slider	1	1	1	1	1	1
30	101S11008	滑块导轨螺钉	Slider guide rail Screw	2	2	2	2	2	2
31-1	13505002	针杆接头	Needle bar connection	1	1	1	1	1	1
31-2	101S11005	针杆接头螺钉	Screw	1	1	1	1	1	1
32	101S11005	螺钉 SM11/64×40×8	Screw SM11/64×40×8	1	1	1	1	1	1
33	13612001	松线钢绳固定架	Fixed frame	1	1	1	1	1	1
34	13612002	松线压板	Press plate	1	1	1	1	1	1
35	10112003	垫片	Washer	1	1	1	1	1	1
36	13523001	毛毡	Oil felt for needle bar	2	2	2	2	2	2
37	101s11010	松线钢绳固定架螺钉	Fixed frame Screw	2	2	2	2	2	2
38	13627002	铰链弹簧	Spring	1	1	1	1	1	1
39	13612003	松线铰链	Hinge	1	1	1	1	1	1
40	13626001	铰链销	Hinge Pin	1	1	1	1	1	1
41	H05024	开口挡圈	RETAINING RING	1	1	1	1	1	1
42	136S12001	铰链螺钉	Hinge Screw	1	1	1	1	1	1
43	1363303000	电机（众邦）	Motor (zhongbang)	1	1	1	1	1	1
44	W02004	弹簧垫圈	Spring washer	4	4	4	4	4	4
45		螺钉 M5×70	Screw M5×70	4	4	4	4	4	4
46	1473300100	功能型电控	Machine electric control	1	1	1	1	1	

2.上轴挑线分组件/Main shaft & thread take-up components

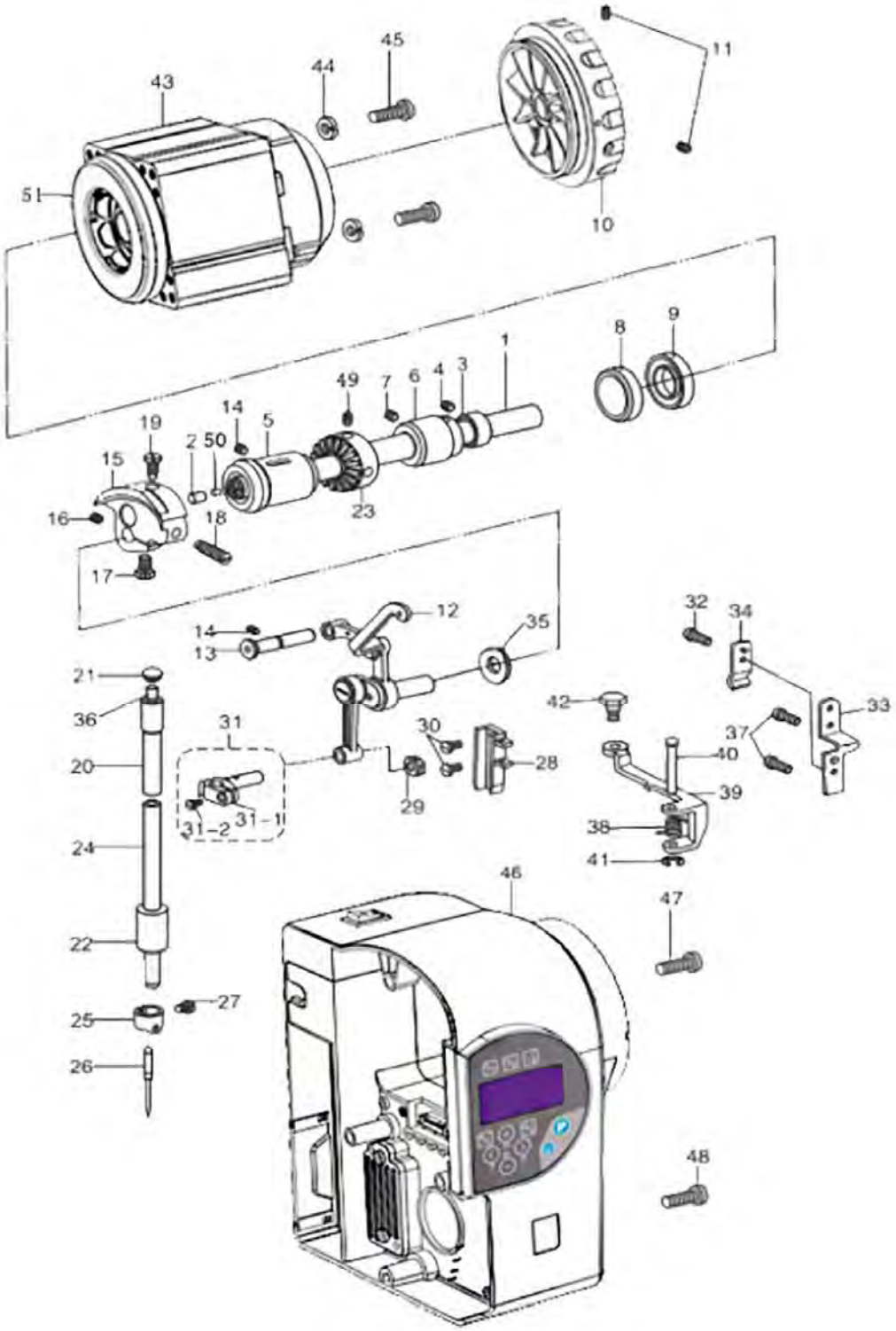

2.上轴挑线分组件/Main shaft & thread take-up components

序号 NO.	公司件号 Part NO.	名称 PartName	零件描述 Description	数量 Number					
				-3	-12	XB	ZD	ST	H5+
	11473300500	功能型电控(物联网)	Machine electric control						1
47	114S13001	螺钉 M5×20	Screw M5×20	1	1	1	1	1	1
48	136S13001	螺钉 M5×35	Screw M5×35	3	3	3	3	3	1
49	S10035	螺钉 M5×8	Screw M5×8	2	2	2	2	2	2
50	10123002	针杆上毡塞	Oil felt for needle bar	1	1	1	1	1	1
51	13811060	电机绝缘防护罩	Motor insulation shield	1	1	1	1	1	1

3.压料分组件/Presser components

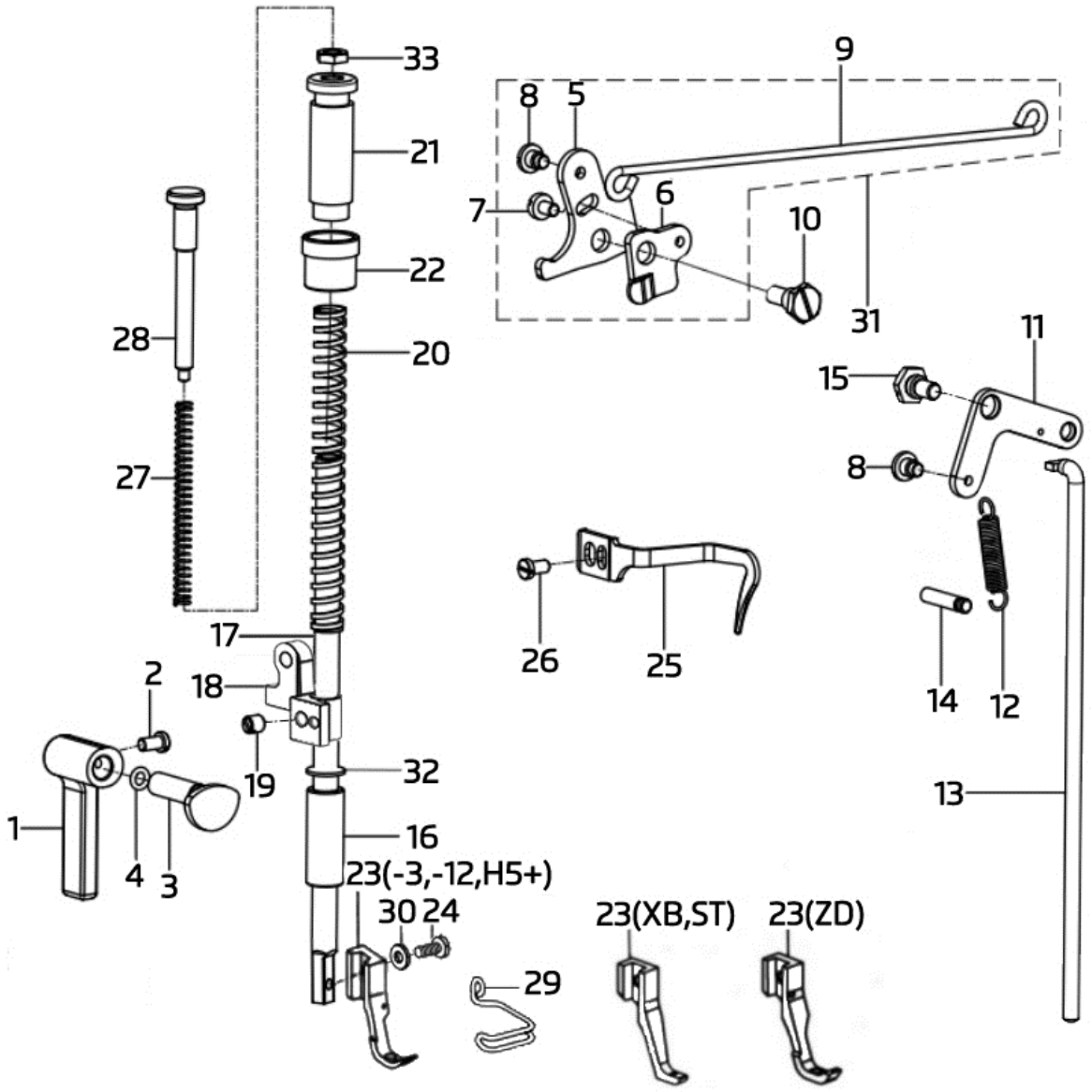

3.压料分组件/Presser components

序号 NO.	公司件号 Part NO.	名称 PartName	零件描述 Description	数量 Number					
				-3	-12	XB	ZD	ST	H5+
1	14711005	压脚扳手	Presser foot wrench	1	1	1	1	1	1
2	101S11008	螺钉 SM11/64×40×8	screw SM11/64×40×8	1	1	1	1	1	1
3	13510004	压紧杆提升凸轮	Presser bar lifting cam	1	1	1	1	1	1
4	001009	O 型圈 4.5X1.8	O-ring 4.5X1.8	1	1	1	1	1	1
5	13512013	膝腔提升杠杆(左)	Knee lifter lever (left)	1	1	1	1	1	1
6	13510005	松线凸轮	Tension releasing cam	1	1	1	1	1	1
7	135S11026	螺钉 SM11/64×40	Screw SM11/64×40	1	1	1	1	1	1
8	135S11027	螺钉 SM3/16×28	screw SM3/16×28	1	1	1	1	1	1
9	13512014	膝腔提升拉杆	Knee lifter rod	1	1	1	1	1	1
10	135S11028	螺钉 SM15/64×28	Screw SM15/64×28	1	1	1	1	1	1
11	13512015	膝腔提升杠杆(右)	Knee lifter lever (right)	1	1	1	1	1	1
12	13527010	膝腔提升杠杆(右)弹簧	Presser spring	1	1	1	1	1	1
13	13512016	膝腔提升杠杆	Knee lifter lever	1	1	1	1	1	1
14	13526005	弹簧销	Pin for spring	1	1	1	1	1	1
15	135S12002	螺钉 SM15/64×28	Screw SM15/64×28	1	1	1	1	1	1
16	13503013	压紧杆轴套	Presser bar bushing	1	1	1	1	1	1
17	13502019	压紧杆	Presser bar	1	1	1	1	1	1
18	114709001	压紧杆导架(加轴承)	Presser bar lifting bracket			1	1	1	1
19	135S15003	螺钉 SM15/64×28	Screw SM15/64×28	1	1	1	1	1	1
20	14727011	压紧杆弹簧	Presser spring	1	1	1	1	1	1
21	135S30004	螺钉 M15×1	screw M15×1	1	1	1	1	1	1
22	135S16003	螺母 M15×1	Nut M15×1	1	1	1	1	1	1
23	13516001	小压脚	Presser foot complete	1	1				1
	13516004	小压脚	Presser foot complete			1		1	
	13516005	小压脚	Presser foot complete				1		
24	101S11009	螺钉 SM9/64×40×10.5	Screw SM9/64×40×10.5	1	1	1	1	1	1
25	13513012	大线勾	thread guide	1	1	1	1	1	1
26	101S11008	螺钉 SM11/64×40×8	Screw SM11/64×40×8	1	1	1	1	1	1
27	14727012	辅助调压弹簧	Presser spring	1	1	1	1	1	1
28	135S30005	螺钉 SM5/16×28	Screw SM5/16×28	1	1	1	1	1	1
29	13512017	防护勾	Defend hook	1	1	1	1	1	1
30	13528007	小压脚螺钉垫片	Washer	1	1	1	1	1	1
31	1351201200	膝腔提升杠杆(左)组件	Knee lifter lever (left)assy	1	1	1	1	1	1
32	30122022	压脚轴碟形密封圈	Gasket	1	1	1	1	1	1
33	1147NS16001	六角螺母 SM5/16×28	Hex nut SM5/16×28	1	1	1	1	1	1

4.送料分组件/Feed mechanism components

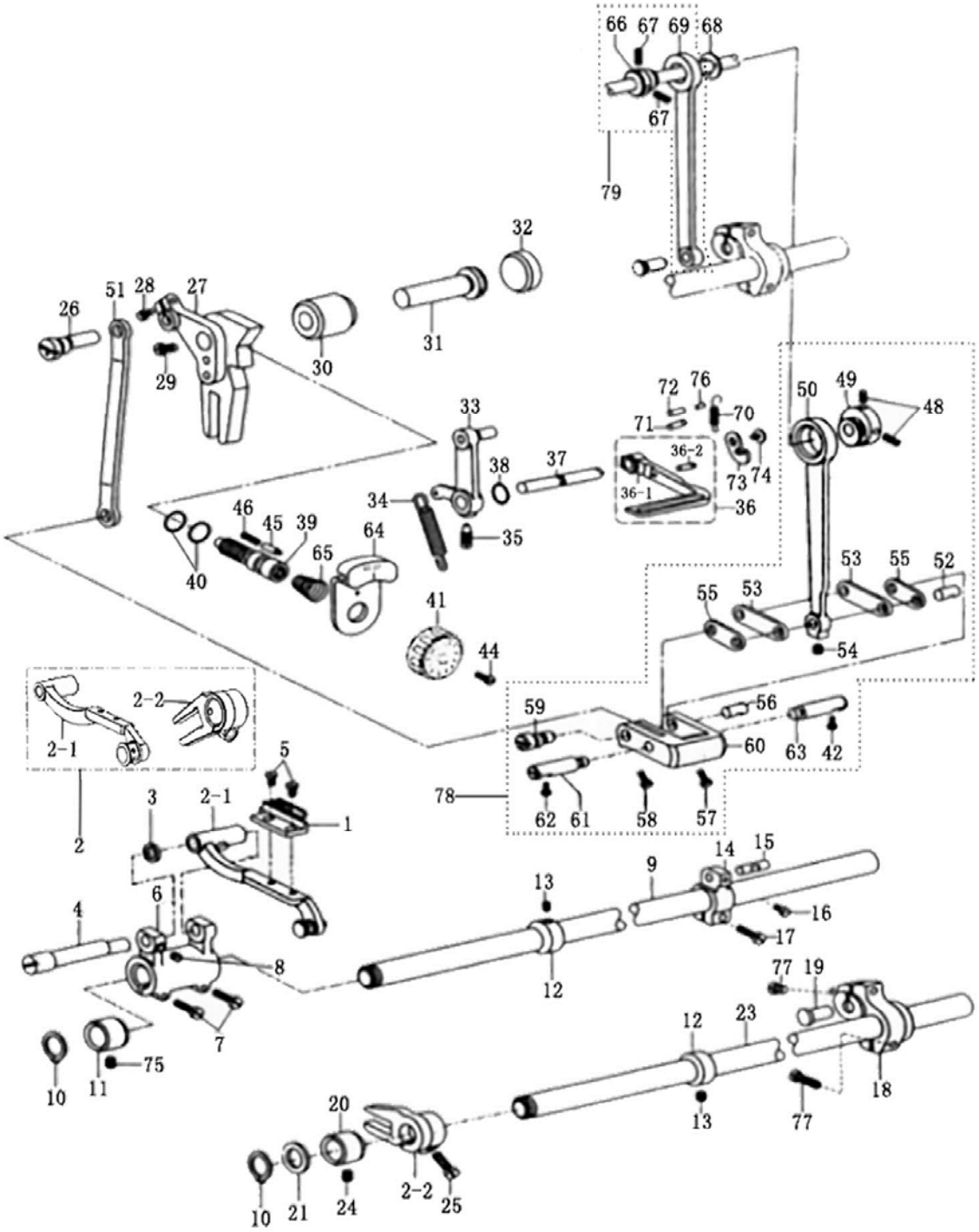

4.送料分组件/Feed mechanism components

序号 NO.	公司件号 Part NO.	名称 PartName	零件描述 Description	数量 Number -3	-12	XB	ZD	ST	H5+
1	13514001	送布牙	Feed dog	1			1		1
	13514002	送布牙	Feed dog			1		1	
	13614003	送布牙(12mm)	Feed dog(12mm)		1				
2	1350700400	牙架组件(12mm)	Feed bar assy(12mm)		1				
2-1	1350700300	牙架小组件	Feed bar assy	1	1	1	1	1	1
2-2	13505004	抬牙叉	Feed forked connection	1		1	1	1	1
	13505018	抬牙叉(12mm)	Feed forked connection(12mm)		1				
3	13528004	牙架垫圈	Washer	1	1	1	1	1	1
4	13502005	牙架曲柄偏心轴	Feed bar shaft	1	1	1	1	1	1
5	101S11018	螺钉 SM1/8×40 L=6	Screw SM1/8×40 L=6	2	2	2	2	2	2
6	13504003	牙架曲柄	Feed crank assy	1	1	1	1	1	1
7	101S11016	螺钉 SM3/16×28 L=14	Screw SM3/16×28 L=14	2	2	2	2	2	2
8	101S11008	螺钉 SM11/64×40×8	Screw SM11/64×40×8	1	1	1	1	1	1
9	13602003	送布轴	Feed rocker shaft	1	1	1	1	1	1
10	H03001	轴用弹性挡圈	Retaining ring	2	2	2	2	2	2
11	13603024	送布轴前轴套	Bushing for feed rock	1	1	1	1	1	1
12	10108003	抬牙、送布轴紧圈	Thrust collar assy	2	2	2	2	2	2
13	101S15002	螺钉 SM1/4×40×6	Screw SM1/4×40×6	4	4	4	4	4	4
14	13504004	送布曲柄（右）	Feed rocker shaft crank assy	1	1	1	1	1	1
15	13526001	送布曲柄短销	Walking foot crank short pin	1	1	1	1	1	1
16	101S11025	螺钉 SM11/64×40×7	Screw SM11/64×40×7	1	1	1	1	1	1
17	409S11021	螺钉 SM11/64×40×14	Screw SM11/64×40×14	1	1	1	1	1	1
18	13504019	抬牙右曲柄	Feed lifting rock shaft	1		1	1	1	1
	13504017	抬牙右曲柄	Feed lifting rock shaft		1	1	1	1	1
19	13502009	抬牙曲柄铰链轴	Hinge pin	1	1	1	1	1	1
20	13603005	抬牙轴前轴套	Bushing for feed rock	1	1	1	1	1	1
21	13528006	垫圈	Washer	1	1	1	1	1	1
23	13602004	抬牙轴	Feed lifting rock shaft	1	1	1	1	1	1
24	135S15009	抬牙轴前轴套螺钉	Screw	1	1	1	1	1	1
25	409S11021	抬牙叉夹紧螺钉	Screw	1	1	1	1	1	1
26	13510002	针距调节连接销钉	Hinge pin	1	1	1	1	1	1
27	13509003	针距座	Feed regulator	1		1	1	1	1
	113501001	针距座(12mm)	Feed regulator(12mm)		1				
28	101S11020	螺钉 SM11/64×40	Screw SM11/64×40 L=10.5	1	1	1	1	1	1
29	135S11009	螺钉 SM15/64×28	Screw SM15/64×28	1	1	1	1	1	1
30	13503026	针距座衬套	Feed regulator bushing	1	1	1	1	1	1
31	13502011	针距座轴	Hinge pin for feed regulator	1	1	1	1	1	1
32	13522014	橡皮塞	Rubber plug(ϕ19.5)	1	1	1	1	1	1
33	1350401400	倒缝操作杆曲柄	Slide block pin	1	1	1	1	1	1
34	13627008	操作杆曲柄弹簧	Spring for feed crank	1	1	1	1	1	1
35	135S15014	螺钉 SM15/64×28	Screw SM15/64×28	1	1	1	1	1	1
36-1	302146	倒缝扳手	Reverse feed lever	1	1	1	1	1	1
36-2	13626002	倒缝扳手销	Hinge pin	1	1	1	1	1	1
37	13602005	倒缝扳手轴	Reverse feed lever shaft	1	1	1	1	1	1
38	001137	O 型圈 Φ6.3×1.8	O-ring Φ6.3×1.8	1	1	1	1	1	1
39	136S30004	针距调节螺杆	Feed regulator screw bar	1	1	1	1	1	1

4.送料分组件/Feed mechanism components

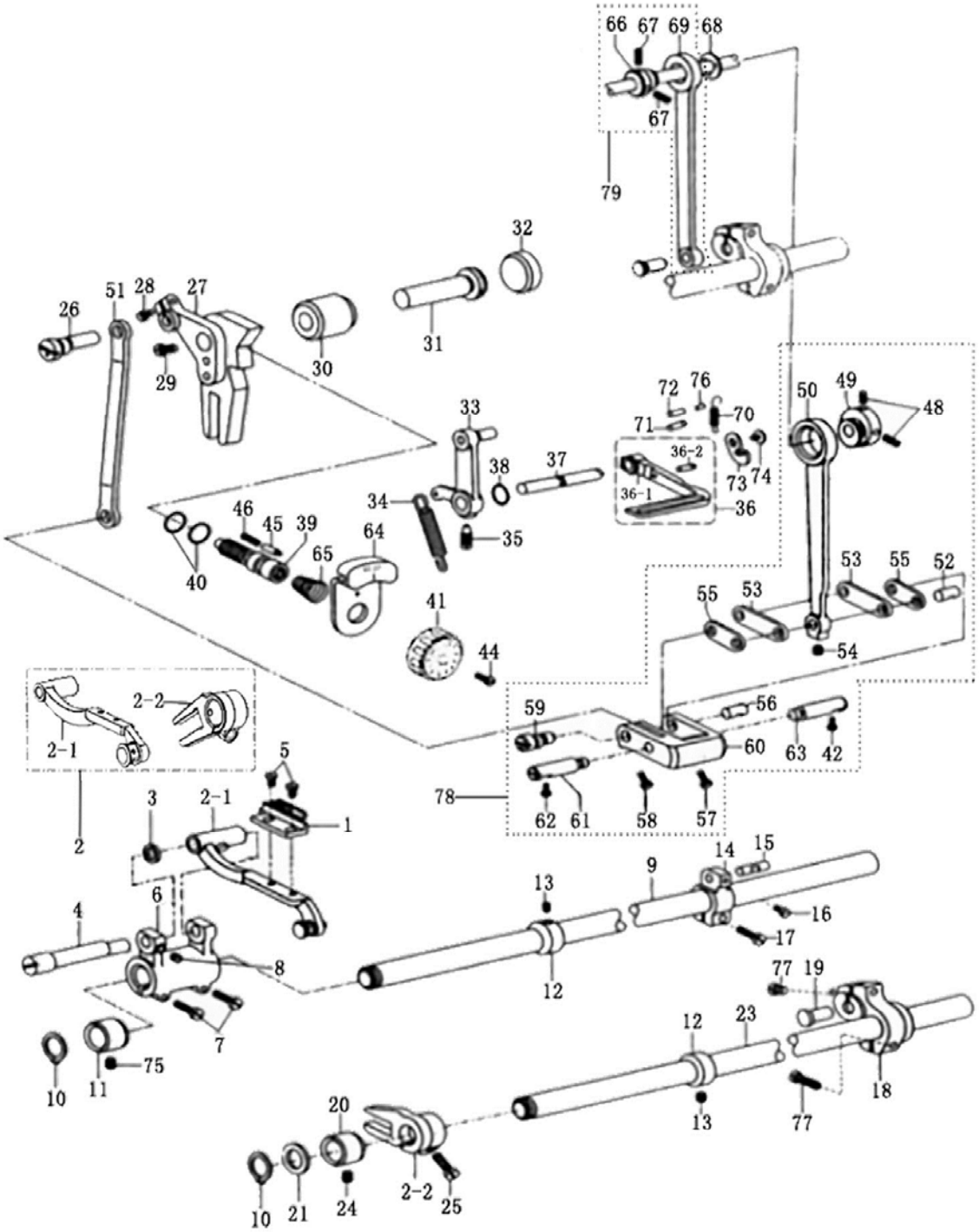

4.送料分组件/Feed mechanism components

序号 NO.	公司件号 Part NO.	名称 PartName	零件描述 Description	数量 Number -3	-12	XB	ZD	ST	H5+
40	001046	O 型圈Φ9.5×2.5	O-ring Φ9.5×2.5	2	2	2	2	2	2
41	1471100200	针距盘	Needle pitch Dial	1		1	1	1	1
	11471100200	针距盘(12mm)	Dial(12mm)		1				
42	114S11004	螺钉 SM11/64×40×18	Screw SM 11/64×40×18	1	1	1	1	1	1
44	101S11022	螺钉 SM3/16×28×18	Dial screw SM3/16×28×18	1	1	1	1	1	1
45	11426022	止动销	Stopper pin	1	1	1	1	1	1
46	11427034	止动销弹簧	Spring for stopper pin	1	1	1	1	1	1
48	135S15007	送布凸轮螺钉	Screw	3	3	3	3	3	3
49	13510003	送布凸轮	Feed drive eccentric cam.	1	1	1	1	1	1
50	13505005	送布连杆	Rocker shaft connecting rod	1	1	1	1	1	1
51	13505006	针距调节连杆	Feed regulator connecting rod	1	1	1	1	1	1
52	13502014	曲柄连杆长销	Crank connecting pin	1	1	1	1	1	1
53	13505023	曲柄长连杆	Crank long link	2	2	2	2	2	2
54	209S14008	螺钉 SM11/64×40×4.5	Screw SM11/64×40×4.5	1	1	1	1	1	1
55	13505024	曲柄短连杆	connecting short link	2	2	2	2	2	2
56	13526003	曲柄连杆短销	Crank connecting pin	1	1	1	1	1	1
57	201S11012	螺钉 SM9/64X40	Screw SM9/64X40	1	1	1	1	1	1
58	201S11007	螺钉 SM9/64X40	Screw SM9/64X40	1	1	1	1	1	1
59	13502015	连杆偏心轴	Hinge pin	1	1	1	1	1	1
60	13504007	针距调节曲柄	Needle pitch adjusting link	1	1	1	1	1	1
61	13502016	针距调节曲柄定位销	Adjusting link fulcrum shaft	1	1	1	1	1	1
62	105S11019	螺钉 SM11/64×40	Screw SM11/64″ ×40 L=13	2	2	2	2	2	2
63	13502017	针距调节曲柄定位销	Adjusting link fulcrum shaft pin	1	1	1	1	1	1
64	14212068	针距按键	Feed regulator key-press	1	1	1	1	1	1
65	13527009	针距按键簧	Dial spring for key-press	1	1	1	1	1	1
66	13510001	抬牙凸轮	Feed drive eccentric cam.	1	1	1	1	1	1
67	135S15007	螺钉 SM11/64×40	Screw SM11/64×40	3	3	3	3	3	3
68	13528002	凸轮隔离片	Thrust collar	1	1	1	1	1	1
69	13505001	抬牙连杆	Connecting rod	1	1	1	1	1	1
70	13627003	倒缝扳手拉簧	Spring for feed crank	1	1	1	1	1	1
71	13626003	弹簧挂销	Spring trip hitch	1	1	1	1	1	1
72	12926001	倒缝扳手限位销	pin	1	1	1	1	1	1
73	13612004	倒缝扳手板	Reverse feed lever	1	1	1	1	1	1
74	136S30001	螺钉 SM3/16×32	Screw SM3/16×32	1	1	1	1	1	1
75	135S15009	螺钉 SM15/64×28	Screw SM15/64×28	1	1	1	1	1	1
76	12921005	销套	Pin bushing	1	1	1	1	1	1
77	135S11048	螺钉 SM3/16×32	Screw SM3/16×32	2	2	2	2		2
	409S11015	螺钉	Screw SM3/16×28×15.5					2	
78	1350501500	送布连杆组件	Rocker shaft connecting rod	1	1	1	1	1	1
79	11350500200	抬牙连杆组件	Connecting rod assy	1	1	1	1	1	1

5.上送料部件/Upper feed Parts

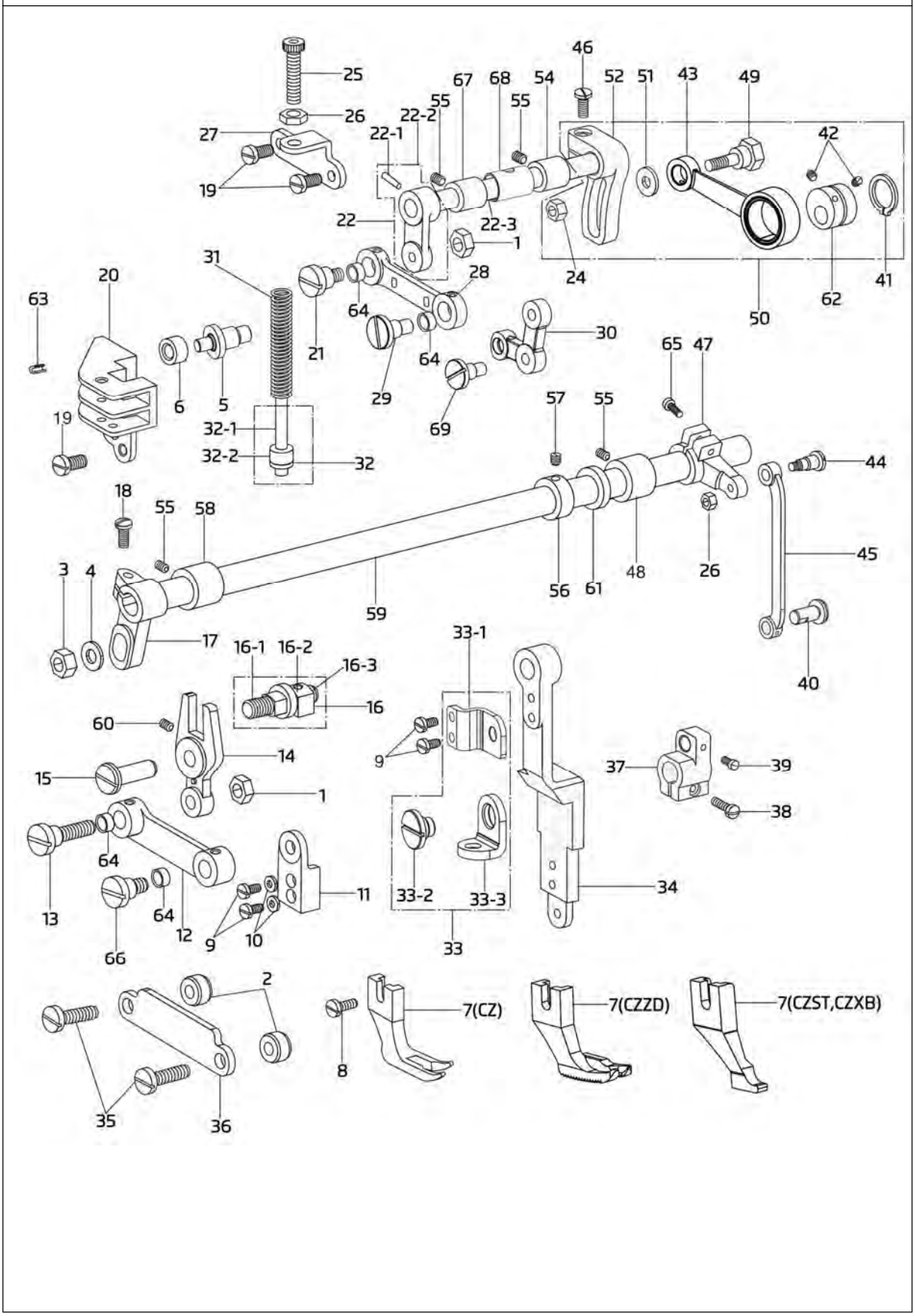

5.上送料部件/Upper feed Parts

序号 NO.	公司件号 Part NO.	名称 PartName	零件描述 Description	数量 Number -3	-12	XB	ZD	ST	H5+
1	135S16004	螺母 SM1/4×40	Nut SM1/4×40	2	2	2	2	2	2
2	13508011	压脚连杆压板垫块	Shim	2	2	2	2	2	2
3	135S16005	螺母 SM1/4×24	Nut SM1/4×24	1	1	1	1	1	1
4	11628005	抬牙叉固定螺钉垫圈	Washer	1	1	1	1	1	1
5	1147NS3000	送料曲柄导柱轴	Guide shaft	1	1	1	1	1	1
6	13508004	提升压脚导柱轴滚柱	Needle of bearing	1	1	1	1	1	1
7	13516002	摆压脚	Walking foot	1	1				1
	13516003	摆压脚	Walking foot			1		1	
	13516006	摆压脚	Walking foot				1		
8	135S11030	螺钉 SM9/64×40	Screw SM9/64×40	1	1	1	1	1	1
9	201S11012	螺钉 SM9/64X40	Screw SM9/64X40	4	4	4	4	4	4
10	W02002	垫圈 4	Washer	2	2	2	2	2	2
11	13601015	摆压脚杆座	Holder for walking foot bar	1	1	1	1	1	1
12	13505028	摆压脚连杆（加轴承）	Link of walking foot	1	1	1	1	1	1
13	135S20013	螺钉 SM1/4×40	Screw SM1/4×40	1	1	1	1	1	1
14	13505030	摆压脚叉形杆(加轴承)	Fork lever	1	1	1	1	1	1
15	13526006	摆压脚叉形杆销	Pin	1	1	1	1	1	1
16	1420900400	摆动轴左曲柄调节柱组件	Crank shaft complete asm	1	1	1	1	1	1
16-1	142S30011	摆动轴左曲柄调节柱	Crank shaft complete	1	1	1	1	1	1
16-2	14209004	曲柄调节柱滑块	Slide block	1	1	1	1	1	1
16-3	H05029	开口挡圈	Split ring	1	1	1	1	1	1
17	13504020	压脚摆动前曲柄	Presser swing shaft	1	1	1	1	1	1
18	402S13011	螺钉 SM15/64×28×18	Screw SM15/64×28×18	1	1	1	1	1	1
19	101S11008	螺钉 SM11/64×40×8	Screw SM11/64×40×8	4	4	4	4	4	4
20	13509004	提升压脚导位板	Lifting presser plate	1	1	1	1	1	1
21	135S20012	螺钉 SM1/4×40	Screw SM1/4×40	1	1	1	1	1	1
22	1350401500	压脚升降前曲柄组件	Presser lifting crank	1	1	1	1	1	1
22-1	113602001	压脚升降轴	Presser lifting crank	1	1	1	1	1	1
22-2	13526007	圆锥销	Taper pin	1	1	1	1	1	1
22-3	13504009	压脚升降前曲柄	Pressure foot lifting shaft	1	1	1	1	1	1
24	N02001	六角螺母 M6X0.75	Hex Nut M6X0.75	1	1	1	1	1	1
25	135S30007	螺钉 SM9/32×28	Screw SM9/32×28	1	1	1	1	1	1
26	135S16006	螺母 SM9/32×28	nut SM9/32×28	2	2	2	2	2	2
27	13512018	摆压脚调压螺钉架	Lifting presser bracket for spring	1	1	1	1	1	1
28	13505027	压脚送料曲柄连杆(加轴承)	Presser feed crank link	1	1	1	1	1	1
29	1147NS20001	螺钉 SM1/4×40×7	Screw SM1/4×40×7	1	1	1	1	1	1
30	114704001	压脚送料曲柄(加轴承)	Presser feed crank	1	1	1	1	1	1
31	14727013	摆压脚调压杆弹簧	Lifting presser spring	1	1	1	1	1	1
32	1350202100	调压杆弹簧导柱	Presser spring guide	1	1	1	1	1	1
32-1	13502026	调压杆弹簧导柱杆	Presser spring guide rod	1	1	1	1	1	1
32-2	13502027	调压杆弹簧导柱套	Presser spring guide bushing	1	1	1	1	1	1
33	1351202000	提升压脚导柱架组件	Lifting presser guide plate assy	1	1	1	1	1	1
33-1	13501005	提升压脚导柱定位板	Lifting presser guide plate	1	1	1	1	1	1
33-2	13512020	提升压脚导柱架	Lifting presser guide plate	1	1	1	1	1	1
33-3	135S11036	螺钉 SM1/4×40×3	Screw SM1/4×40×3	1	1	1	1	1	1
34	13501006	摆压脚杆	Presser rod guide	1	1	1	1	1	1
35	116s11005	螺钉 SM11/64×40×13	Screw SM11/64×40×13	2	2	2	2	2	2
36	13512019	提升压脚连接压板	Lifting presser sway crank guide	1	1	1	1	1	1

5.上送料部件/Upper feed Parts

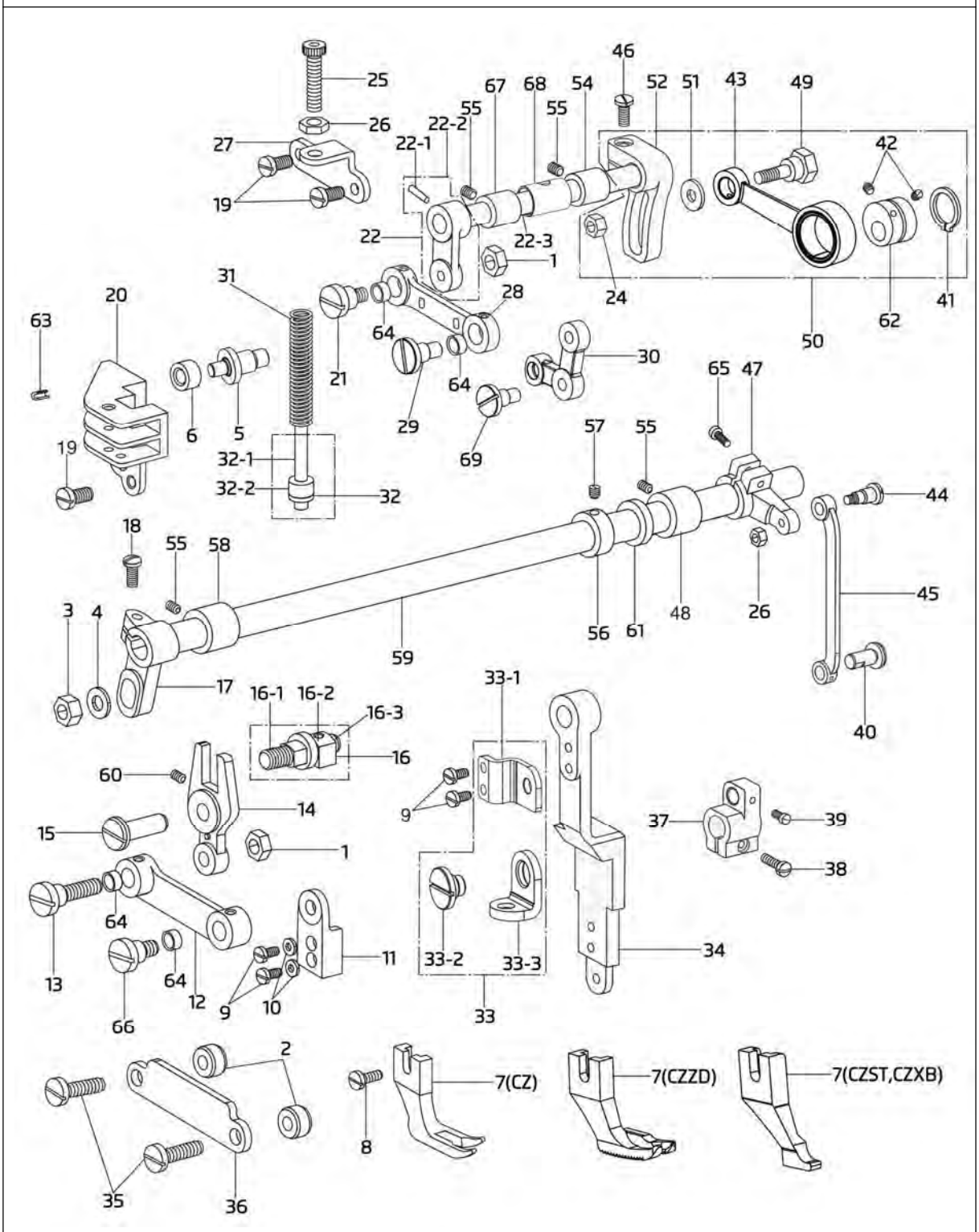

5.上送料部件/Upper feed Parts

序号 NO.	公司件号 Part NO.	名称 PartName	零件描述 Description	数量 Number -3	-12	XB	ZD	ST	H5+
37	13504011	送布轴曲柄（中）	Feed rocker shaft crank middle	1	1	1	1	1	1
38	101S11025	螺钉 SM11/64×40×7	Screw SM11/64×40×7	1	1	1	1	1	1
39	116s11005	螺钉 SM11/64×40×13	Screw SM11/64×40×13	1	1	1	1	1	1
40	135S20004	大连杆曲柄连接销	pin	1	1	1	1	1	1
41	H03061	轴用弹性挡圈 24	Retaining ring 24	1	1	1		1	1
		轴用弹性挡圈 26	Retaining ring 26				1		
42	101S15007	螺钉 SM1/4×40×8	Screw SM1/4×40×8	2	2	2	2	2	2
43	11470500300	连杆小组件	Connecting rod widget	1	1	1		1	1
	11470500800	连杆小组件(4.5mm)	Connecting rod widget(4.5mm)				1		
44	135S20005	螺钉 SM9/32×28	Screw SM9/32×28	1	1	1	1	1	1
45	13505014	摆压脚大连杆	Presser swing crank(right)rod	1	1	1	1	1	1
46	135S11035	螺钉 SM1/4×24	Screw SM1/4×24	1	1	1	1	1	1
47	13504023	压脚摆动后曲柄	Presser swing crank(right)	1	1	1	1	1	1
48	13503014	压脚摆动轴中轴套	Presser swing middle shaft bushing	1	1	1	1	1	1
49	135S20006	螺钉 M6×0.75	Screw M6×0.75	1	1	1	1	1	1
50	11470500200	连杆组件	Connecting rod assy	1	1	1			1
	11470500700	连杆组件(4.5mm)	Connecting rod(4.5mm)				1		
	11470500500	连杆组件(2.5mm)	Connecting rod(2.5mm)					1	
51	13528008	垫圈	Washer	1	1	1	1	1	1
52	13504013	偏心连杆调节曲柄	Presser lifting shaft	1	1	1	1	1	1
54	13603014	摆压脚提升轴后套	Presser lifting shaft back bushing	1	1	1	1	1	1
55	135S15008	螺钉 SM15/64×28×6	Screw SM15/64×28×6	3	3	3	3	3	3
56	13508009	紧圈	Shaft washer	1	1	1	1	1	1
57	135S15004	螺钉 SM1/4×40×4	Screw SM1/4×40×4	2	2	2	2	2	2
58	13508008	压脚摆动轴前轴套	Presser swing shaft front bushing (left)	1	1	1	1	1	1
59	13502023	压脚摆动轴	Presser swing shaft	1	1	1	1	1	1
60	101S11001	螺钉 SM3/16"X28 L=9	Screw SM3/16"X28 L=9	1	1	1	1	1	1
61	11472200200	摆动轴后套油封	Oil seal	1	1	1	1	1	1
62	114710001	压脚升降偏心轮	Eccentric wheel	1	1	1			1
	114710003	压脚升降偏心轮(4.5mm)	Eccentric wheel(4.5mm)				1		
	114710002	压脚升降偏心轮(2.5mm)	Eccentric wheel(2.5mm)					1	
63	P03035	弹性圆柱销 3X8	Spring round pin3X8	2	2	2	2	2	2
64	10124001	滚针轴承	Needle bearing	4	4	4	4	4	4
65	402S13011	螺钉 SM15/64×28×18	Screw SM15/64×28×18	1	1	1	1	1	1
66	135S20014	螺钉 SM1/4×40	Screw SM1/4×40	1	1	1	1	1	1
67	13603013	摆压脚提升轴前套	Presser lifting shaft bushing	1	1	1	1	1	1
68	13603028	摆压脚提升中轴套	Presser lifting shaft bushing	1	1	1	1	1	1
69	1147NS20002	螺钉 SM1/4×40	Screw SM1/4×40	1	1	1	1	1	1

6.旋梭部件/Hook components

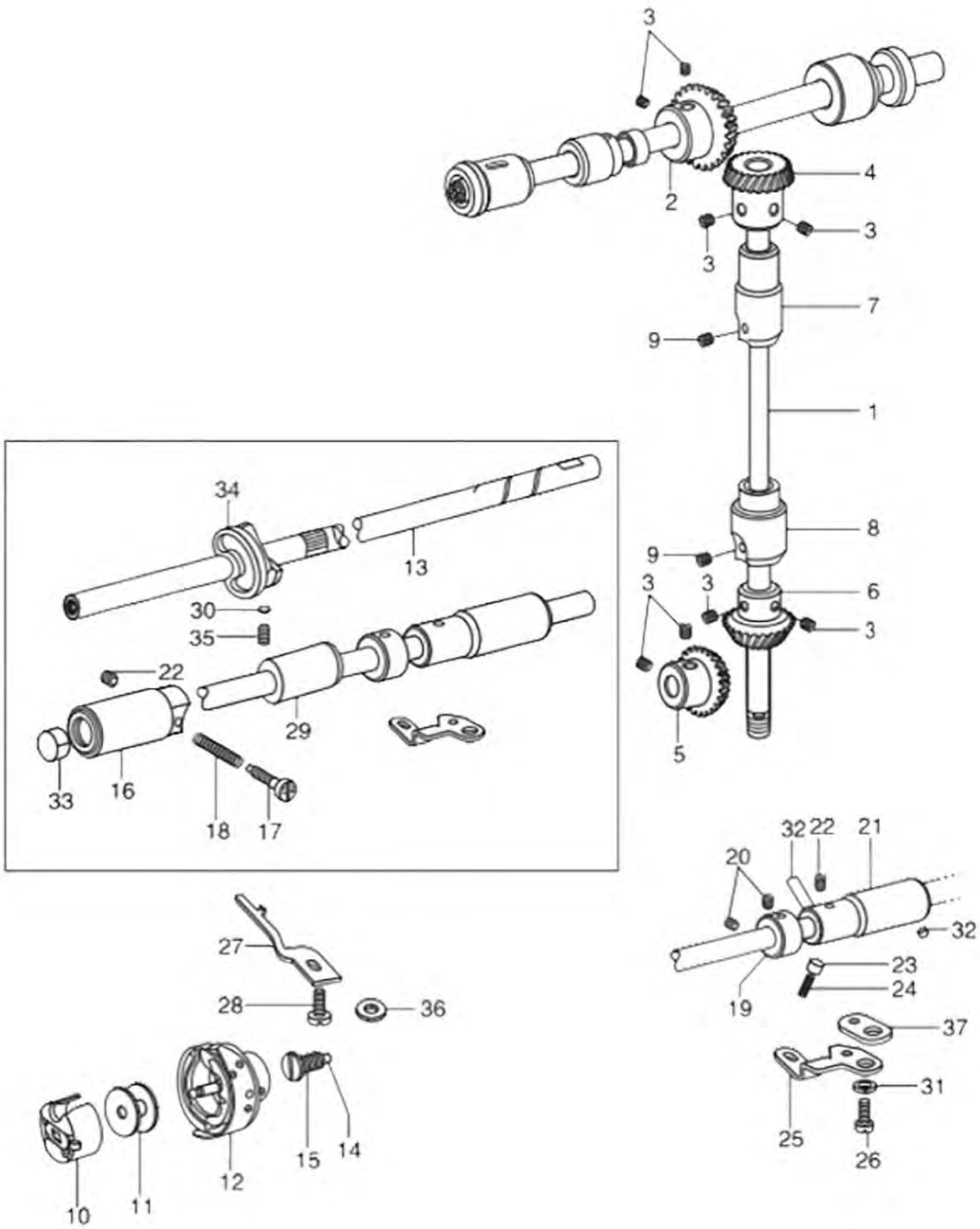

6.旋梭部件/Hook components

序号 NO.	公司件号 Part NO.	名称 PartName	零件描述 Description	数量 Number					
				-3	-12	XB	ZD	ST	H5+
1	13502002	竖轴	upright shaft	1	1	1	1	1	1
2	13525001	上轴伞齿轮	Gear asm.	1	1	1	1	1	1
3	101s15007	螺钉 SM1/4×40×8	Screw SM1/4×40×8	8	8	8	8	8	8
4	13525002	竖轴伞齿轮（上）	Gear asm.	1	1	1	1	1	1
5	13525003	下轴伞齿轮	Pinion asm.	1	1	1	1	1	1
6	13525004	竖轴伞齿轮（下）	Gear asm.	1	1	1	1	1	1
7	13503018	竖轴轴套（上）	Bushing,upper	1	1	1	1	1	1
8	13503019	竖轴轴套(下)	Upring shaft bushing, Lower	1	1	1	1	1	1
9	135S15008	螺钉 SM15/64×28	Screw SM15/64×28	2	2	2	2	2	2
10	13618001	梭心套组件	Hook asm	1	1	1	1	1	1
11	10818501	梭芯	Bobbin	1	1	1	1	1	1
12	13618003	旋梭(无尾)	Hook asm (without tail)				1		
	13618007	旋梭(有尾)	Hook asm (with tail)	1	1	1		1	1
13	13602006	下轴	Hook driving shaft	1	1	1	1	1	1
14	10123003	下轴滤油塞	Oil wick	1	1	1	1	1	1
15	135S20007	螺钉 SM3/16×32	Screw SM3/16×32	1	1	1	1	1	1
16	13503009	下轴前轴套	Bushing,front	1	1	1	1	1	1
17	135S20008	镙钉 SM15/64×28	Screw SM15/64×28	1	1	1	1	1	1
18	13527005	油量调节弹簧	Spring	1	1	1	1	1	1
19	10108002	下轴紧圈	Thtust shrink collar asm.	1	1	1	1	1	1
20	101S11012	螺钉 SM11/64×40×4.8	Screw SM11/64×40×4.8	2	2	2	2	2	2
21	13603025	下轴后轴套	Bushing,rear	1	1	1	1	1	1
22	135S15009	螺钉 SM15/64×28	Screw SM15/64×28	1	1	1	1	1	1
23	13502008	柱塞	Plunger	1	1	1	1	1	1
24	13527006	柱塞弹簧	Plunger spring	1	1	1	1	1	1
25	13512009	档板	Guide plate	1	1	1	1	1	1
26	135S11019	螺钉 SM15/64×28	Screw SM15/64×28	1	1	1	1	1	1
27	13512010	旋梭定位勾	Rotating hook positioner	1	1	1	1	1	1
28	101S11011	螺钉 SM11/64×40×9.5	Screw SM11/64×40×9.5	1	1	1	1	1	1
29	13603026	下轴中轴套	Bushing,middle	1	1	1	1	1	1
30	13628003	切线凸轮螺钉垫片	washer	2	2	2	2	2	2
31	W02004	档板螺钉弹簧垫圈	Washer	1	1	1	1	1	1
32	13521001	下轴轴套油管	Oil pipe for hook shaft bushi	1	1	1	1	1	1
33	11522001	下轴油封	Plunger	1	1	1	1	1	1
34	13610003	切线凸轮	Thread trimmer cam	1	1	1	1	1	1
35	116S14005	螺钉 SM1/4×40×10	Screw SM1/4×40×10	2	2	2	2	2	2

7.润滑组件/Oil lublication components

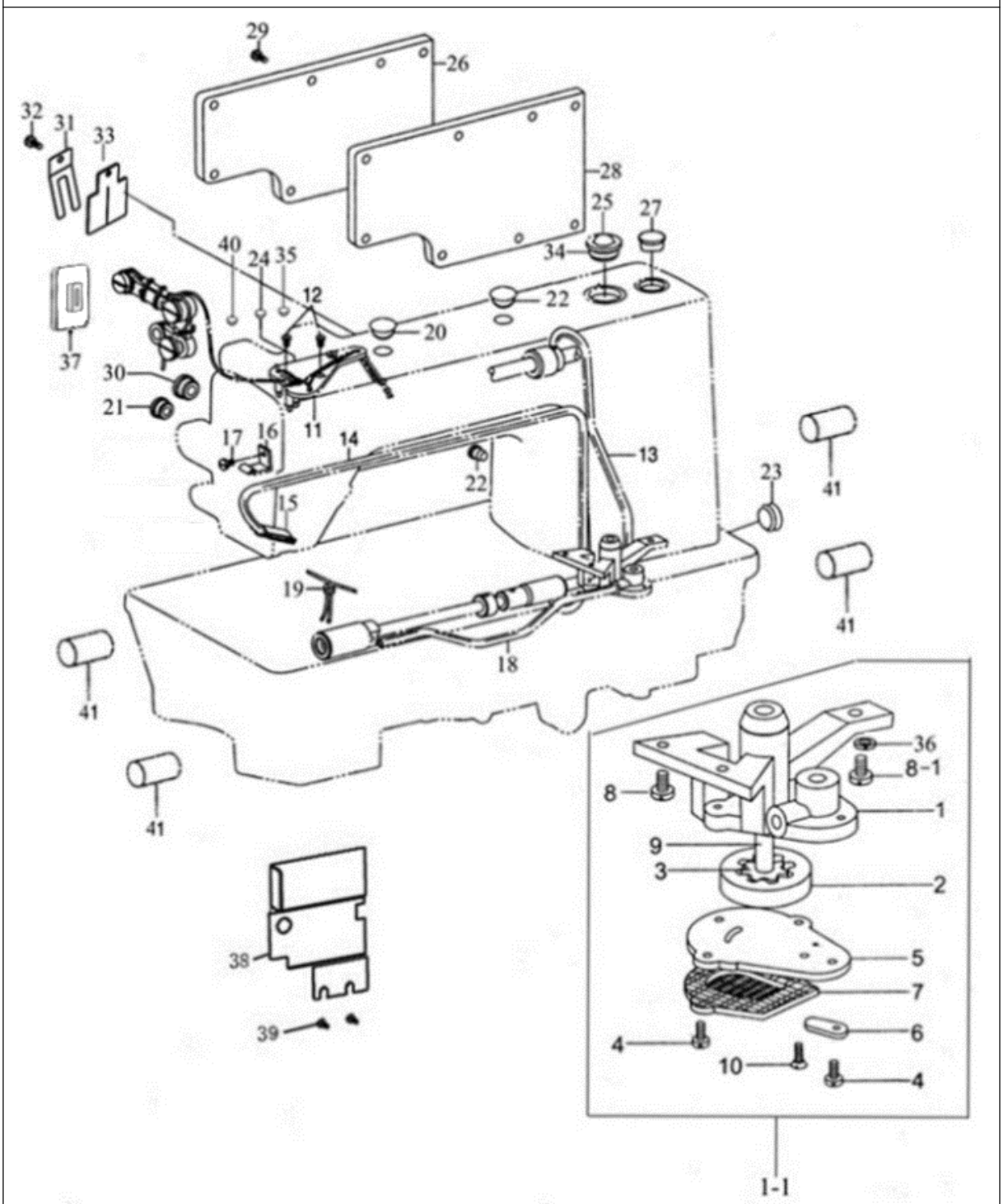

7.润滑组件/Oil lublication components

序号 NO.	公司件号 Part NO.	名称 PartName	零件描述 Description	数量 Number -3	-12	XB	ZD	ST	H5+
1-1	1352000200	油泵组件	Oil pump asm	1	1	1	1	1	1
1	13520001	油泵体	Oil pump	1	1	1	1	1	1
2	13525005	油泵大齿轮	Big gear for oil pump	1	1	1	1	1	1
3	13525006	油泵小齿轮	Small gear for oil pump	1	1	1	1	1	1
4	135S11037	螺钉 M3×10	Screw M3×10	3	3	3	3	3	3
5	13512021	油泵体盖板	Cover for oil pump	1	1	1	1	1	1
6	13512022	油泵调节板	Adjusting plate for oil pump	1	1	1	1	1	1
7	13512024	油泵滤网	Oil pump Filter	1	1	1	1	1	1
8	105S11019	螺钉 SM11/64×40×13	Screw SM11/64×40×13	3	3	3	3	3	3
8-1	114S11004	螺钉 SM11/64×40×18	Screw SM11/64×40×18	1	1	1	1	1	1
9	13502024	油泵体短轴	Shaft for oil pump	1	1	1	1	1	1
10	S02032	油泵体盖板螺钉 M3×6	Screw M3×6	2	2	2	2	2	2
11	1351202400	油线固定板大组件	Oil wick set plate complete	1	1	1	1	1	1
12	101S11010	螺钉 SM9/64×40×11	Screw SM9/64×40×11	2	2	2	2	2	2
13	1352100700	上轴油管组件	Oil pipe complete for upper shaft	1	1	1	1	1	1
14	12921002	回油管φ3Xφ4	Oil return pipe	1	1	1	1	1	1
15	13523003	回油管滤油毡	Oil felt	1	1	1	1	1	1
16	13512025	回油管夹	Pipe return pipe clamp	1	1	1	1	1	1
17	201S11014	螺钉 SM11/64X40	Screw SM11/64X40	1	1	1	1	1	1
18	1362100100	下轴油管组件	Oil pipe for arm lower shaft	1	1	1	1	1	1
18-1	13621001	下轴油管	Oil pipe for lower shaft	1	1	1	1	1	1
18-2	13636001	下轴油管接头	lower shaft Hose connector	1	1	1	1	1	1
19	10423005	油线 2.5x260/2.5x290	Oil wick	1	1	1	1	1	1
20	13522001	面板橡皮塞（φ19）	Rubber plug(φ19)	1	1	1	1	1	1
21	13522002	面板橡皮塞（φ11.8）	Rubber plug(φ11.8)	1	1	1	1	1	1
22	13522003	橡皮塞（φ8.8）	Rubber plug(φ8.8)	1	1	1	1	1	1
23	13522004	橡皮塞（φ27）	Rubber plug φ27	1	1	1	1	1	1
24	13522005	橡皮塞（φ5.7）	Rubber plug φ5.7	2	2	2	2	2	2
25	10111004	油窗	Oil sight window	1	1	1	1	1	1
26	304715	后盖板	Side plate	1	1	1	1	1	1
27	13522008	橡皮塞（φ25.5）	Rubber plug φ25.5	1	1	1	1	1	1
28	14722006	后盖板密封垫片	Gasket	1	1	1	1	1	1
29	101S11001	螺钉 SM3/16X28×9	Screw SM3/16X28×9	8	8	8	8	8	8
30	12922001	橡皮塞	Rubber plug φ12.5	1	1	1	1	1	1
31	305102	小挡油板	Keep off plate	1	1	1	1	1	1
32	101S11004	螺钉 SM3/16"X28 X7	Screw SM3/16"X28 X7	1	1	1	1	1	1
33	14722011	小挡油板羊毛毡	Keep off plate wool felt	1	1	1	1	1	1
34	10122019	油窗 O 型圈	O-ring	1	1	1	1	1	1
35	14022013	A4S-0754 孔塞 8.5	Rubber plug φ8.5	1	1	1	1	1	1
36	W01006	GB/T97.1-1985 垫圈 4	Spring washer	1	1	1	1	1	1
37	13522018	大连杆橡胶垫	Rubber gasket	1	1	1	1	1	1
38	13612023	挡油板	Keep off plate	1	1	1	1	1	1
39	112S11014	螺钉 SM11/64×40×5.3	Screw SM11/64×40×5.3	2	2	2	2	2	2
40	10122005	挑线连杆销螺孔塞	Take-up link pin screw plug	1	1	1	1	1	1
41	13523005	羊毛块	Oil felt	4	4	4	4	4	4

8.切线装置部件/Thread trimmer components

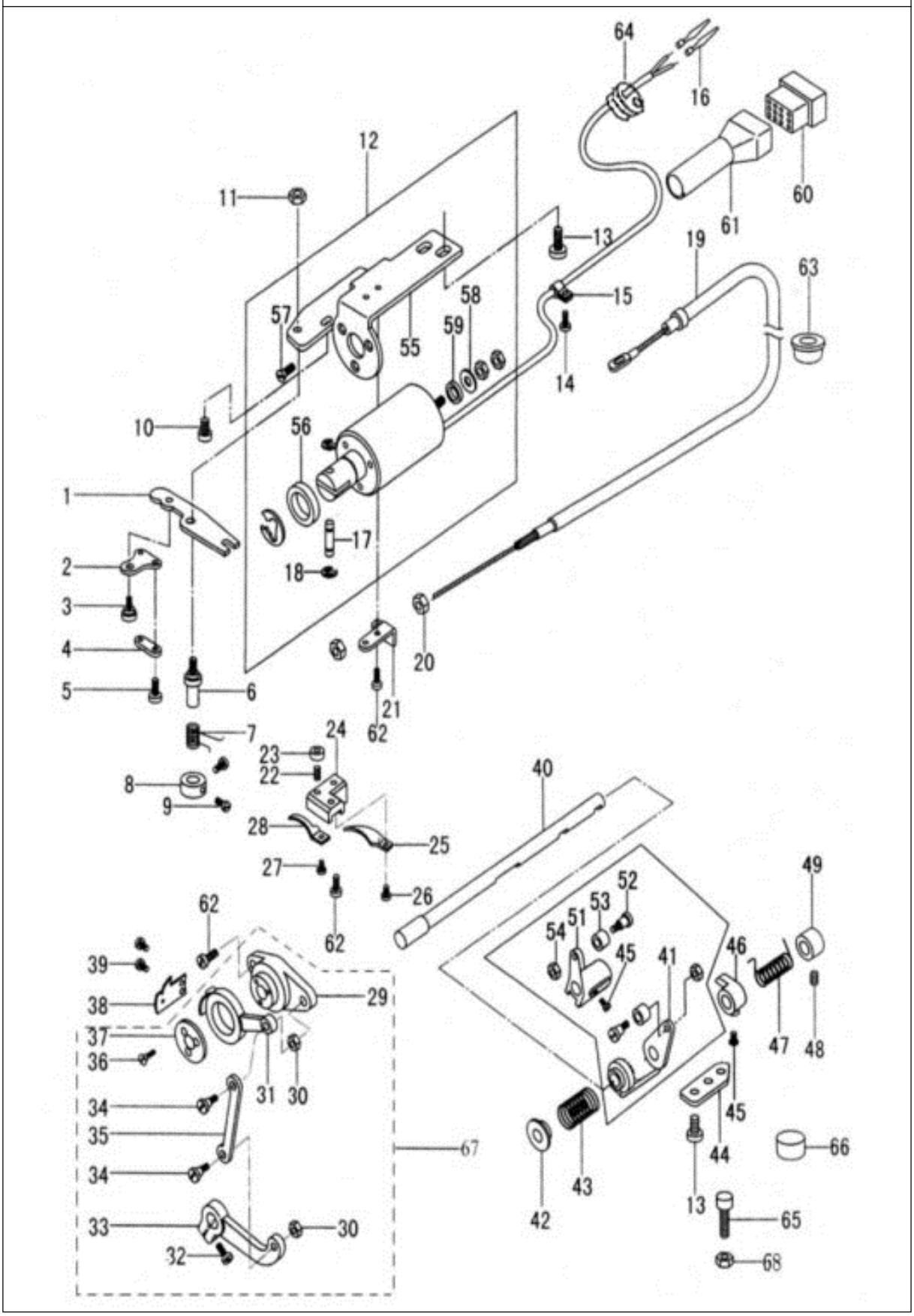

8.切线装置部件/Thread trimmer components

序号 NO.	公司件号 Part NO.	名称 PartName	零件描述 Description	数量 Number -3	-12	XB	ZD	ST	H5+
1	13612006	驱动板	Thread trimmer driving lever	1	1	1	1	1	1
2	13612007	软线支撑板	Adapter	1	1	1	1	1	1
3	136S20001	螺钉 SM11/64×40	Screw SM11/64×40	1	1	1	1	1	1
4	13612008	软线连板	Adapter	1	1	1	1	1	1
5	305S12005	螺钉 SM1/8×44	Screw	2	2	2	2	2	2
6	13602007	驱动板轴	shaft	1	1	1	1	1	1
7	13627004	驱动板弹簧	Spring	1	1	1	1	1	1
8	30108004	驱动板轴紧圈	Shrink collar	1	1	1	1	1	1
9	101S11005	螺钉 SM9/64×40×6	Screw SM9/64×40×6	2	2	2	2	2	2
10	101S11020	螺钉 SM11/64×40×10.	Screw SM11/64×40×10.5	1	1	1	1	1	1
11	114S16005	螺母 SM15/64×28	Nut SM15/64×28	1	1	1	1	1	1
12	1363000600	剪线电磁铁	Thread electromagnet drive	1	1	1	1	1	1
13	201S11029	螺钉 SM15/64X28×11	Screw SM15/64X28×11	4	4	4	4	4	4
14	101S11025	螺钉 SM11/64×40×7	Screw SM11/64×40×7	1	1	1	1	1	1
15	12312011	电线固定夹	Cable clip	1	1	1	1	1	1
16		插头接头	Plug connector	2	2	2	2	2	2
17	13626005	剪线电磁铁销	Pin	1	1	1	1	1	1
18	H05012	挡圈	Ring	2	2	2	2	2	2
19	1361300300	松线钢绳组件	Loose wire rope assembly	1	1	1	1	1	1
20	116S16010	软线螺母	Nut	2	2	2	2	2	2
21	13612009	软线座	The mounting plate	1	1	1	1	1	1
22	136S10004	螺钉 SM11/64×40×8.9	Screw SM11/64×40×8.9	1	1	1	1	1	1
23	136S16003	螺母 SM9/64×40	Screw SM9/64×40	1	1	1	1	1	1
24	13601007	定刀座	Bracket for fixed blade	1	1	1	1	1	1
25	13612010	栏线板	Thread guide	1	1	1	1	1	1
26	101S11005	螺钉 SM9/64×40×6	Screw SM9/64×40×6	1	1	1	1	1	1
27	136S17001	螺钉 SM9/64×40×4	Screw SM9/64×40×4	1	1	1	1	1	1
28	13619001	定刀片	Fixed blade	1	1	1	1	1	1
29	42209006	刀架	Knife holding bracket saddle	1	1	1	1	1	1
30	422S16002	螺母 SM11/64×40	Nut SM11/64×40	2	2	2	2	2	2
31	42204008	切线刀架 L	Knife base (left)	1	1	1	1	1	1
32	S05005	螺钉 M5×12	Screw M5×12	1	1	1	1	1	1
33	13604001	剪线电磁铁驱动曲柄	Knife driving crank	1	1	1	1	1	1
34	422S20006	螺钉 SM11/64×40×5.5	Screw SM11/64×40×5.5	2	2	2	2	2	2
35	42205008	刀架连杆	Link	1	1	1	1	1	1
36	422S17006	螺钉 SM1/8×44×5.4	Screw SM1/8×44×5.4	3	3	3	3	3	3
37	42212049	刀架垫圈	Washer	1	1	1	1	1	1
38	13619002	动刀片	Movable knife (left)	1	1	1	1	1	1
39	136S17003	螺钉 SM11/64×40×4.5	Screw SM11/64×40×4.5	2	2	2	2	2	2
40	13602008	凸轮曲柄轴	Knife driving shaft	1	1	1	1	1	1
41	13604002	切线凸轮右曲柄	Tangential cam right crank	1	1	1	1	1	1
42	13601010	扭簧端盖	Torsion spring end cap	1	1	1	1	1	1
43	13627005	曲柄轴弹簧	Spring	1	1	1	1	1	1
44	13612011	止动板	Stopper plate	1	1	1	1	1	1
45	136S14002	螺钉 SM15/64X28×6	Screw SM15/64X28×6	3	3	3	3	3	3
46	13601011	限位块	Stopper	1	1	1	1	1	1
47	13627006	凸轮轴扭簧	Spring	1	1	1	1	1	1
48	113S14020	螺钉 SM11/64×40×6	Screw SM11/64×40×6	2	2	2	2	2	2
49	20108001	凸轮轴紧圈	Thrusr tighten collar asm	1	1	1	1	1	1
51	13604003	切线凸轮左曲柄	Tangent cam left crank	1	1	1	1	1	1

8.切线装置部件/Thread trimmer components

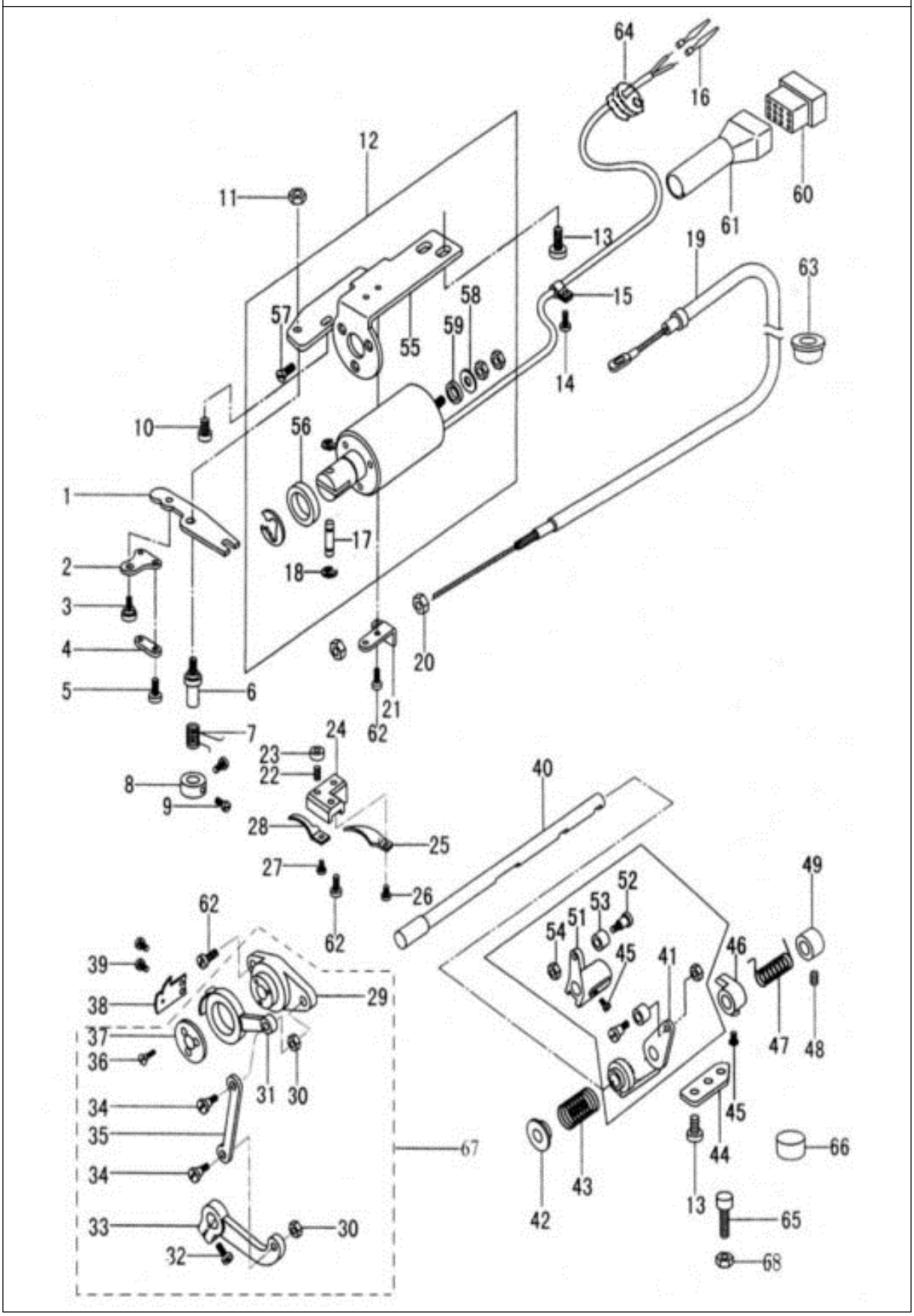

8.切线装置部件/Thread trimmer components

序号 NO.	公司件号 Part NO.	名称 PartName	零件描述 Description	数量 Number					
				-3	-12	XB	ZD	ST	H5+
52	136S20003	螺钉 SM3/16×28×8	Screw SM3/16×28×8	2	2	2	2	2	2
53	13609002	滚轮	Cam follower	2	2	2	2	2	2
54	136S17005	滚轮螺母 SM3/16×28	Nut SM3/16×28×3	2	2	2	2	2	2
55	13612012	剪线电磁铁安装架	Wire trimming electromagnet	1	1	1	1	1	1
56	13628005	密封垫圈（大）	Gasket	1	1	1	1	1	1
57	136S17004	剪线电磁铁紧固螺钉	Screw	3	3	3	3	3	3
58	13628006	平垫片	Washer	1	1	1	1	1	1
59	13628007	密封垫圈（小）	Washer	1	1	1	1	1	1
60		插头套	Plug sleeve	1	1	1	1	1	1
61		线罩	Wire cover	1	1	1	1	1	1
62	101S11025	螺钉 SM11/64×40×7	Screw SM11/64×40×7	4	4	4	4	4	4
63	13628011	栏线板垫片	Gasket	1	1	1	1	1	1
64	13622004	电线孔塞	Wire plug	1	1	1	1	1	1
65	136S30002	止动螺钉 M6×16	Screw M6×16	1	1	1	1	1	1
66	13628008	缓冲垫	Cushion	1	1	1	1	1	1
67	1360100800	刀架组件	Knife holding bracket saddle	1	1	1	1	1	1
68	205S16002	螺母 M6×3.5	Nut M6×3.5	1	1	1	1	1	1

9.自动倒送料开关组件/Automatic reverse feed components

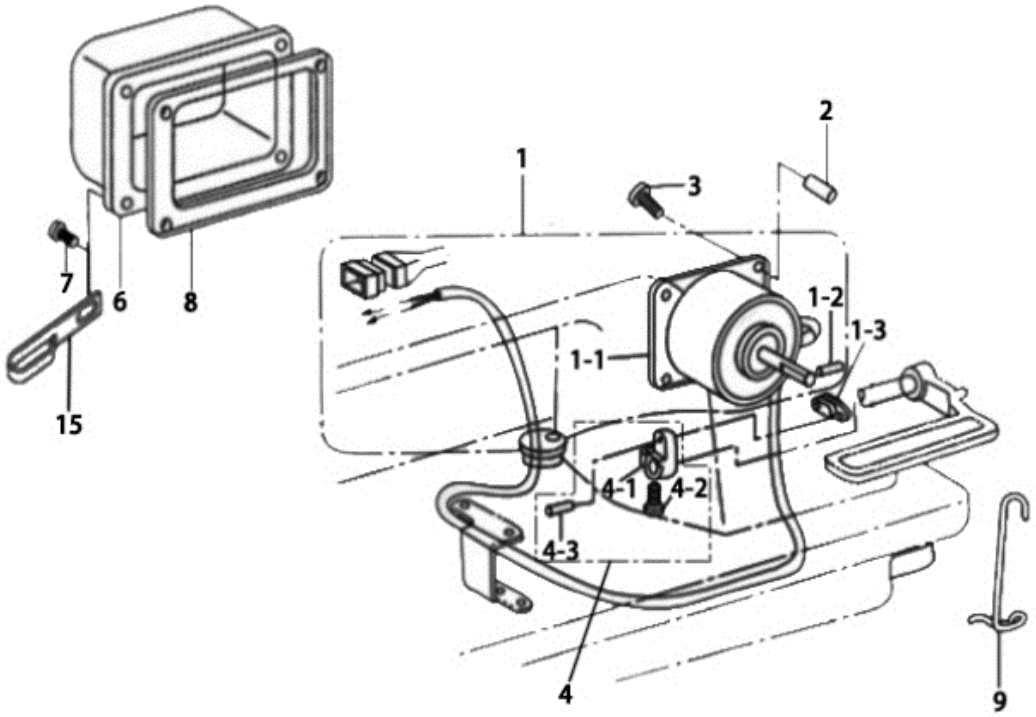

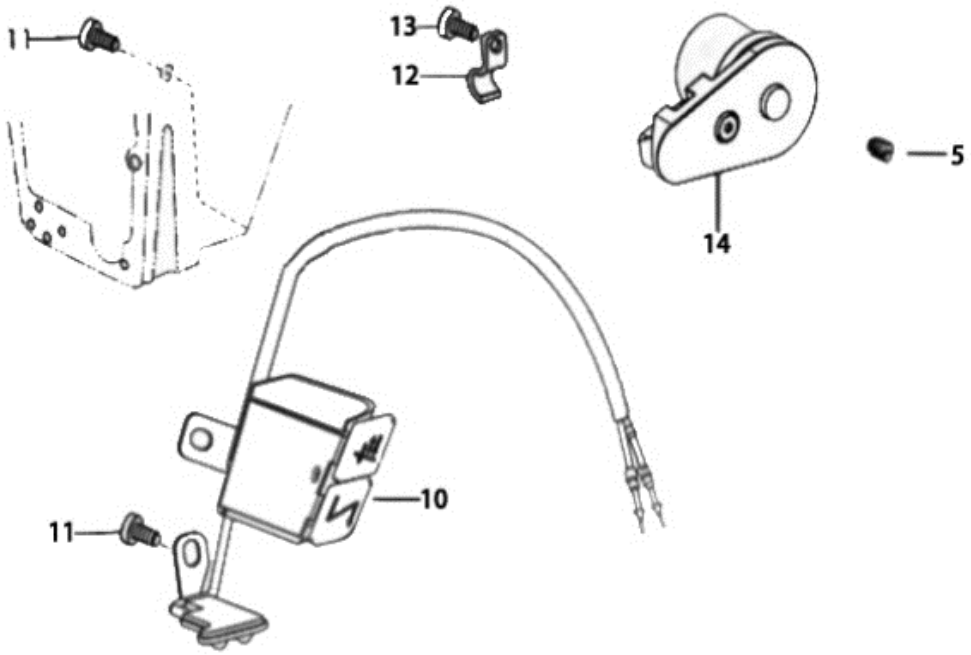

9.自动倒送料开关组件/Automatic reverse feed components

序号 NO.	公司件号 Part NO.	名称 PartName	零件描述 Description	数量 Number					
				-3	-12	XB	ZD	ST	H5+
1	1363000700	倒缝电磁铁大组件	Backstitch electromagnet	1	1	1	1	1	1
1-1	1363000500	倒缝电磁铁组件	Backstitch electromagnet	1	1	1	1	1	1
1-2	13626007	倒缝电磁铁连杆销	Backstitch electromagnet link	1	1	1	1	1	1
1-3	13605002	倒缝电磁铁连杆	Backstitch solenoid rod	1	1	1	1	1	1
2	13603011	衬套	Bush	4	4	4	4	4	4
3	136S15005	衬套螺钉 M5×25	Screw M5×25	4	4	4	4	4	4
4	1360400400	倒缝电磁铁曲柄组件	Backstitch electromagnet crank	1	1	1	1	1	1
4-1	13604004	倒缝电磁铁曲柄	Backstitch electromagnet crank	1	1	1	1	1	1
4-2	136S11012	螺钉 SM3/16×32×14	Screw SM3/16×32×14	1	1	1	1	1	1
4-3	13626006	倒缝电磁铁曲柄连杆	link pin	1	1	1	1	1	1
5	113S14020	螺钉 SM11/64×40×6	Screw SM11/64×40×6	1	1	1	1	1	1
6	302147	倒缝电磁铁罩	Backstitch solenoid cover	1	1	1	1	1	1
7	101S11021	螺钉 SM3/16×28×12	Screw SM3/16×28×12	4	4	4	4	4	4
8	13628009	倒缝电磁铁罩垫片	Seals washer	1	1	1	1	1	1
9	13627007	倒缝操作杆曲柄弹簧	Spring hook	1	1	1	1	1	1
10	1473000800	倒缝电磁铁开关组件	Switch assembly	1	1	1	1	1	1
11	101s11004	螺钉 SM3/16X28 X7	Screw SM3/16X28 X7	2	2	2	2	2	2
12	40511001	塑料线夹	Clamps	3	3	3	3	3	3
13	101S11005	螺钉 SM9/64×40×6	Screw SM9/64×40×6	2	2	2	2	2	2
14	1363001000	少鸟巢电子夹线器	Nest less e-device	1	1	1	1	1	1
15	41312003	油管固定架	oil tube hohder	1	1	1	1	1	1

10.机头附件/Machine head accessories

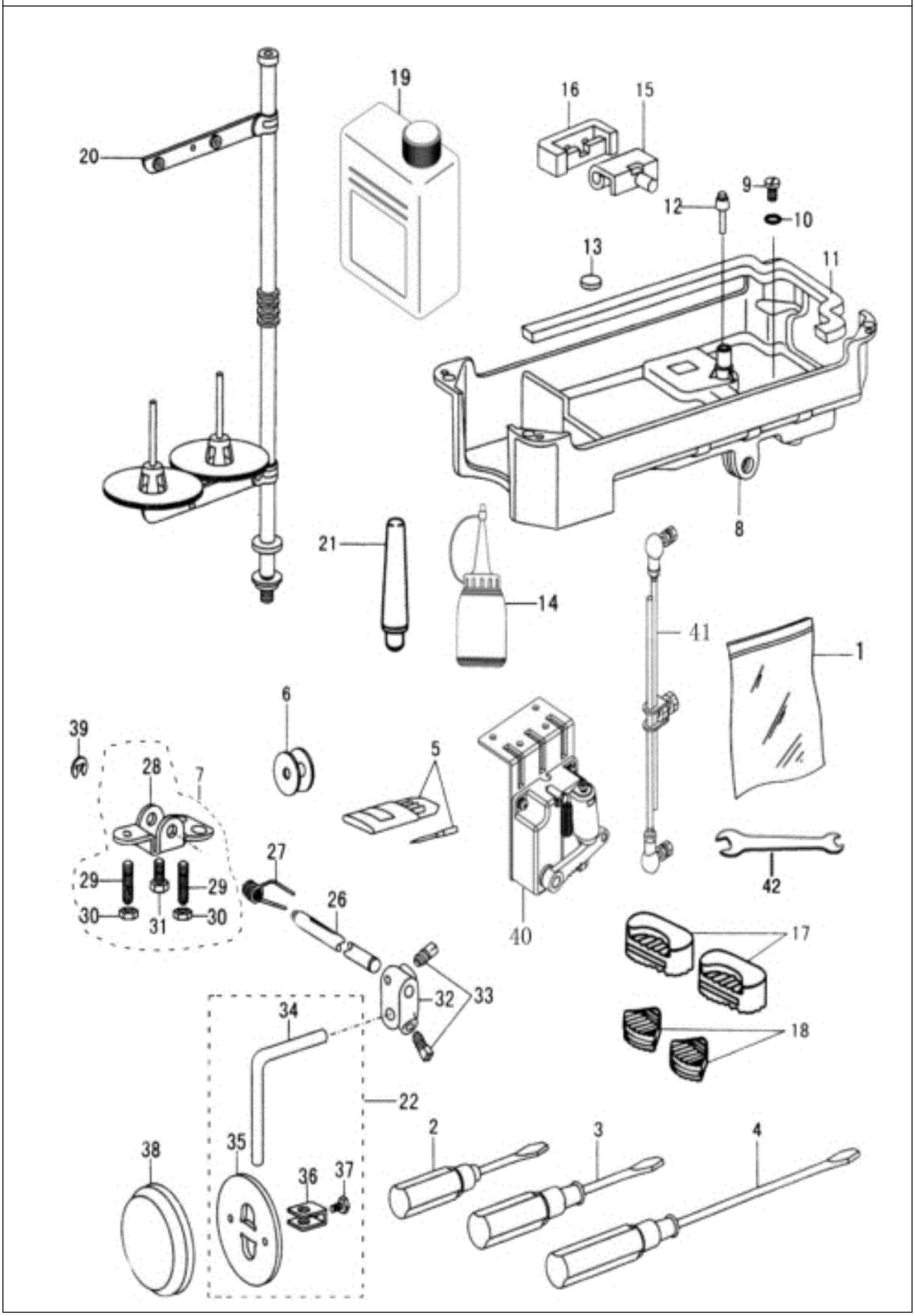

10.机头附件/Machine head accessories

序号 NO.	公司件号 Part NO.	名称 PartName	零件描述 Description	数量 Number -3	-12	XB	ZD	ST	H5+
1	114131001	A5-1311 防尘罩	Machine head cover	1	1	1	1	1	1
2	10131004	螺钉起子（小）	Screw driver(small)	1	1	1	1	1	1
3	10131003	螺钉起子（中）	Screw driver(middle)	1	1	1	1	1	1
4	20731047	螺丝刀	Screw driver(large)	1	1	1	1	1	1
5	13517001	机针(DP×17 23#)	Needle(DP×17 23#)	4	4		4		4
	13517003	机针(DP×17 22#)	Needle(DP×17 22#)			4			
	11617002	机针(DP×5 14#)	Needle(DP×5 14#)					4	
6	10818501	梭芯	Bobbin	5	5	5	5	5	5
7	1351203700	膝控限位架组件	Knee control limit frame	1	1	1	1	1	1
	1350100900	油盘组件	Oil pan assembly	1	1	1	1	1	1
8	13501007	油盘	Oil reservoir	1	1	1	1	1	1
9	101S11028	放油螺钉 SM5/16×24×7	Screw SM5/16×24×7	1	1	1	1	1	1
10	001047	放油螺钉垫圈	Washer	1	1	1	1	1	1
11	13523006	油盘垫	Gasket	1	1	1	1	1	1
12	13511006	膝控提升顶杆	Knee press lifter rod	1	1	1	1	1	1
13	10131001	磁块	Magnet	1	1	1	1	1	1
14	20131038	小油壶	Oil pot	1	1	1	1	1	1
15	10122060	机壳铰链	Rubber coat	2	2	2	2	2	2
16	1011203100	机壳铰链套	Hing	2	2	2	2	2	2
17	113522001	机头防震垫块（大）	Cushion(big)	2	2	2	2	2	2
18	10122022	机头防震垫块（小）	Cushion(small)	2	2	2	2	2	2
19	1011101200	油箱	Oil tank	1	1	1	1	1	1
20	1383100300	线架组件	Spool stand complete	1	1	1	1	1	1
21	10111011	机头支柱	Frame support bar	1	1	1	1	1	1
22	1351203800	膝控操纵杆组件	Joystick assembly	1	1	1	1	1	1
26	13502025	膝控铰链轴	Hinge pin	1	1	1	1	1	1
27	13527014	膝控复位弹簧	Spring	1	1	1	1	1	1
28	13512026	膝控限位架	Knee lifter stop bracket	1	1	1	1	1	1
29	135S15019	膝控限位调节螺钉 M6	Screw M6	2	2	2	2	2	2
30	N01029	调节螺母 M6	Nut M6	2	2	2	2	2	2
31	135S12003	膝控限位架螺钉 M6	Screw M6	1	1	1	1	1	1
32	10101008	碰块弯杆接头	Connector	1	1	1	1	1	1
33	101s12003	螺钉 M8	Screw M8	2	2	2	2	2	2
34	13512038	膝控碰块弯杆	Bent rod	1	1	1	1	1	1
35	10112029	膝控碰块	Bell	1	1	1	1	1	1
36	10112030	碰块架	Bell bracket	1	1	1	1	1	1
37	101s12004	碰块架螺钉 M6×11	Screw M6×11	1	1	1	1	1	1
38	10122024	碰块垫	mat	1	1	1	1	1	1
39	H05010	开口挡圈	Split stop ring	1	1	1	1	1	1
40	10130044	电控脚踏	Electric control pedal	1	1	1	1	1	1
41	20730335	脚踏连杆	Pedal connecting rod	1	1	1	1	1	1
42	114712003	开口扳手(14-10)	open wrench	1	1	1	1	1	1

11.自动抬压脚部件/Automtic presser foots parts

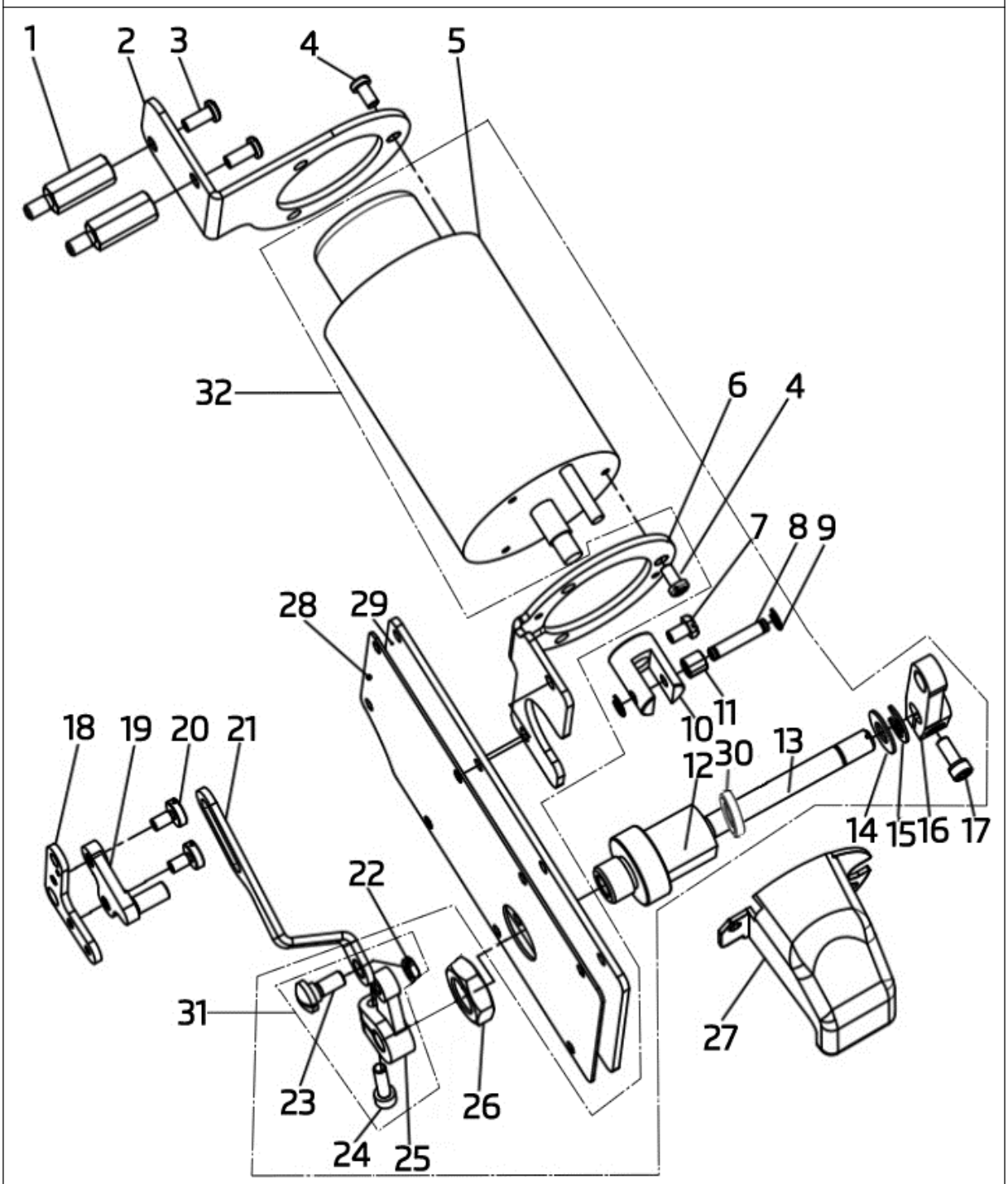

11.自动抬压脚部件/Automatic presser foots parts

序号 NO.	公司件号 Part NO.	名称 PartName	零件描述 Description	数量 Number -4	ZD-4	XB-4
1	40712305	盖板连接前螺杆	Screw cover plate connection front	2	2	2
2	302886	电磁铁安装板 1	Electromagnet mounting plate 1 (paint) assembly	1	1	1
3	421S10008	螺钉 M5×12	Screw M5×12	2	2	2
4	403S11012	螺钉 M4×10	Screw M4×10	6	6	6
5	13630013	抬压电磁铁	Lift the piezoelectric magnet	1	1	1
6	302887	电磁铁安装板 2	Electromagnet mounting plate 2 (paint)	1	1	1
7	S05038	接头螺钉 M5×8	Joint screw M5×8	1	1	1
8	11226007	电磁铁曲柄销	Electromagnet crank	1	1	1
9	H05003	挡圈	Retaining ring	2	2	2
10	11201007	电磁铁芯轴接头	Electromagnetic iron core shaft coupling	1	1	1
11	11203003	曲柄套筒	Crank shaft sleeve	1	1	1
12	114703002	套筒	Sleeve	1	1	1
13	13602012	自动抬压脚轴	The presser foot lifter axis	1	1	1
14	13628015	套筒垫片	Seals	1	1	1
15	H05011	挡圈	Retaining ring	1	1	1
16	11204005	电磁铁曲柄	Electromagnet crank	1	1	1
17	S05013	螺钉 M5×12	Screw M5×12	1	1	1
18	13512035	膝腔提升杠杆(右)	Knee lifter lever (right)	1	1	1
19	13605005	拉杆曲柄	Rod crank	1	1	1
20	409S11014	螺钉 SM3/16×28×7.7	Screw SM3/16×28×7.7	2	2	2
21	13612028	拉杆	Tie rod	1	1	1
22	112S16012	拉杆螺母	Rod nut	1	1	1
23	112S20008	螺钉 M6×12	Screw M6×12	1	1	1
24	S05004	螺钉 M5×14	Screw M5×14	1	1	1
25	11204004	自动抬压脚曲柄	Automatic presser foot crank	1	1	1
26	112S16011	套筒螺母 M16×1.5	Sleeve nut M16×1.5	1	1	1
27	13612022	罩壳	The trim	1	1	1
28	114722004	后窗板密封垫	Rear window gasket	1	1	1
29	302885	后窗板	Rear window	1	1	1
30	13622006	油封	Oil seal	1	1	1

12.新款自动抬压脚部件/Automtic presser foots parts

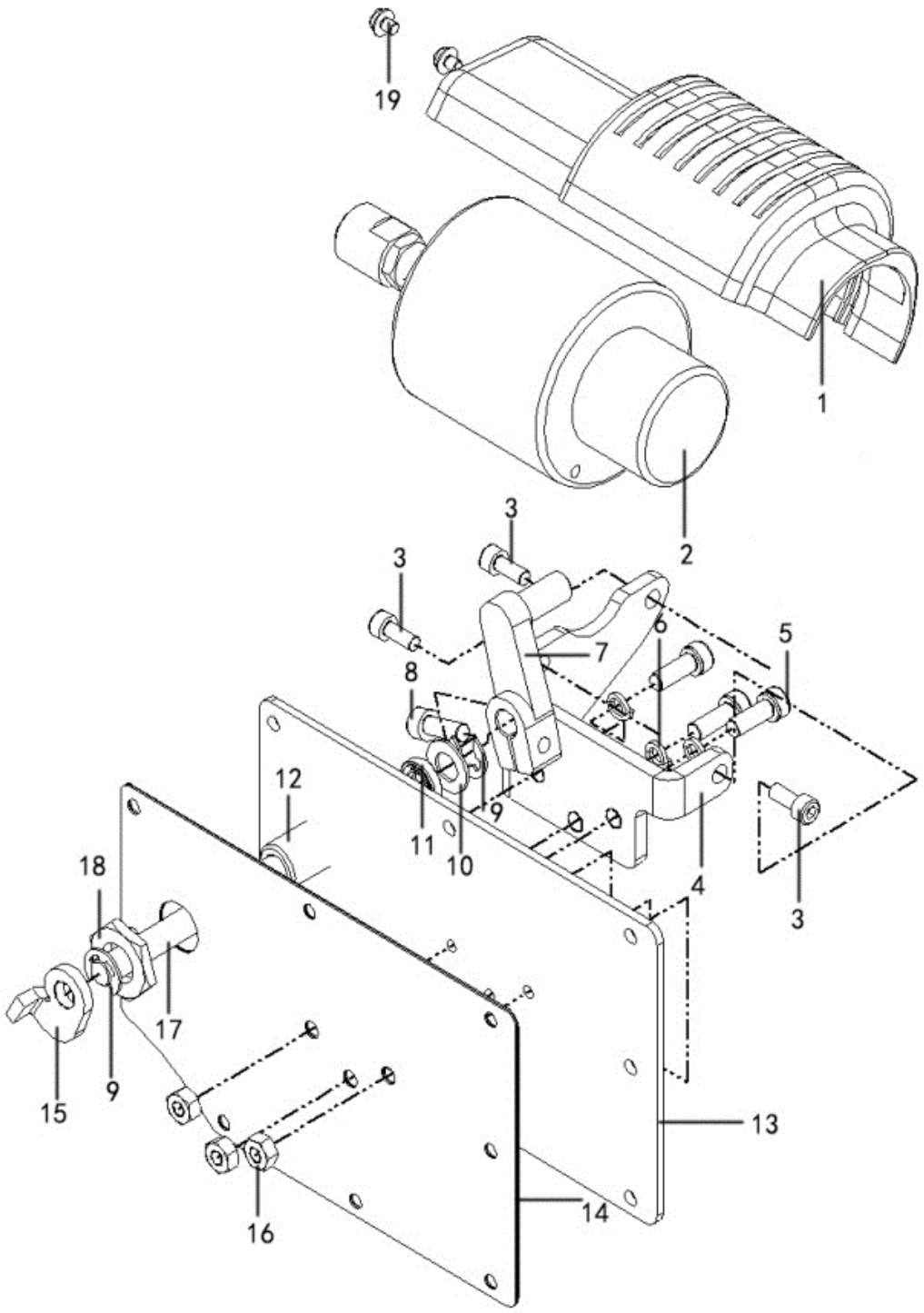

12.新款自动抬压脚部件/Automatic presser foots parts

序号 NO.	公司件号 Part NO.	名称 PartName	零件描述 Description	数量 Number		
				-4	ZD-4	XB-4
1	114744001	电磁铁防护罩	Electromagnet shield	1	1	1
2	11473000400	抬压脚电磁铁组件	Lifting foot electromagnet assembly	1	1	1
3	S05005	螺钉 M5×12	Screw M5×12	3	3	3
4	114712006	电磁铁安装架	Electromagnet mount	1	1	1
5	207S11026	螺钉 M6×16	Screw M6×16	3	3	3
6	W02004	M6 不锈钢弹垫	Spring washer M6	3	3	3
7	114704002	自动抬压脚曲柄	Automatic lifting foot crank assembly	1	1	1
8	207S11026	曲柄锁紧螺钉 M6×16	ScrewM6×16	1	1	1
9	12929003	挡圈 E8	Retaining ring E8	2	2	2
10	12928004	轴向垫圈 A 1.2MM	Axial washer 1.2MM	1	1	1
11	30122039	压脚轴套油封	Oil seal	1	1	1
12	114703002	套筒	Sleeve	1	1	1
13	114712010	后窗板	Rear window	1	1	1
14	114722004	后窗板密封垫	Rear window gasket	1	1	1
15	114712007	自动抬压脚内曲柄	Automatic lifting foot crank	1	1	1
16	N01007	六角螺母 M6	Nut M6	1	1	1
17	114702003	自动抬压脚轴	Lifting foot shaft	1	1	1
18	112S16011	套筒螺母 M16×1.5	Sleeve nut M16×1.5	1	1	1
19	421S11008	螺钉 M4×10	Screw M4×10	2	2	2

13.气动抬压脚部件/Automtic presser foots parts

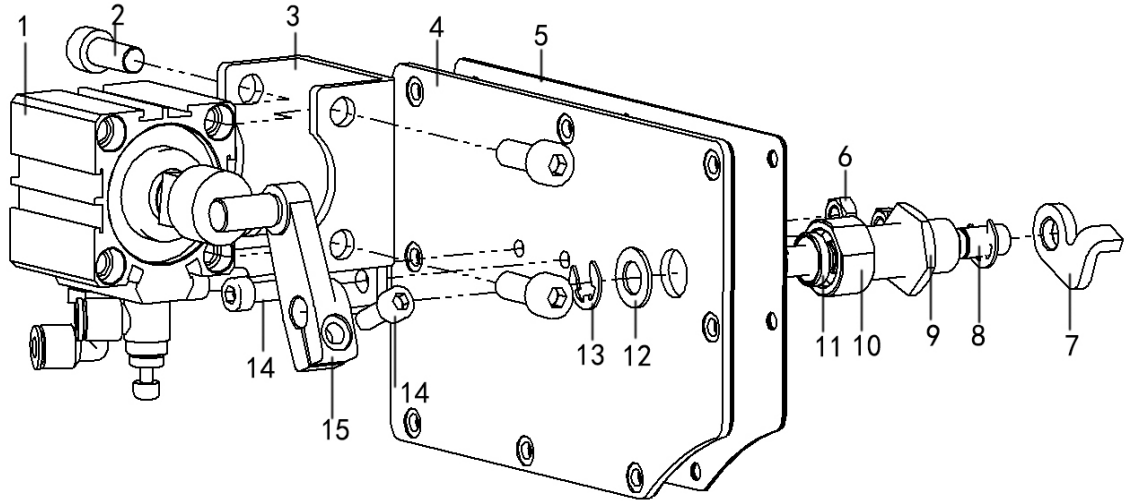

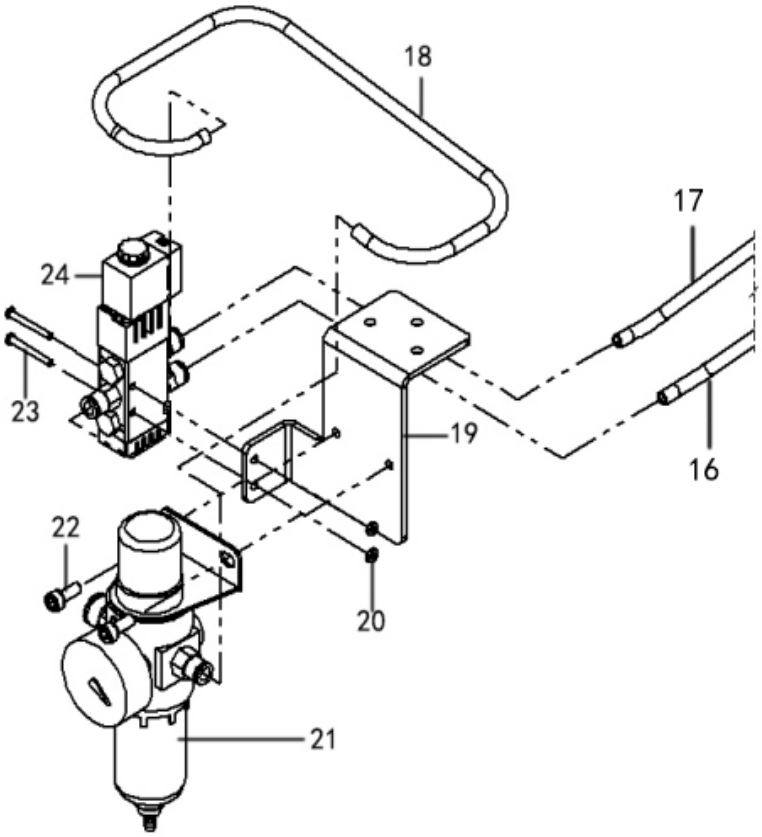

13.气动抬压脚部件/Automatic presser foots parts

序号 NO.	公司件号 Part NO.	名称 PartName	零件描述 Description	数量 Number P-4
1	11474500200	抬压脚气缸组件	Lifting foot cyalinder assembly	1
2	S05007	螺钉 M8×20	Screw M8x20	4
3	114712008	气缸安装支架	Cylinder mounting plate	1
4	114712009	后窗板(气动)	Rear window	1
5	114722003	后窗板密封垫片(气动)	Rear window gasket	1
6	N01007	六角螺母 M6	Nut M6	2
7	114712007	自动抬压脚内曲柄	Automatic lifting foot crank	1
8	114702003	自动抬压脚轴	Lifting foot shaft	1
9	112S16011	套筒螺母 M16×1.5	Sleeve nut M16×1.5	1
10	114703002	套筒	Sleeve	1
11	30122039	压脚轴套油封	Oil seal	1
12	12928004	轴向垫圈 A 1.2MM	Axial washer 1.2MM	1
13	H05001	开口挡圈	Retaining ring E8	1
14	207S11026	气缸安装架固定螺钉	Screw	3
15	114704002	自动抬压脚曲柄	Automatic lifting foot crank	1
16		气管	Trachea	2
17		气管	Trachea	1
18		气管	Trachea	1
19	142312006	气压阀安装板	Valve mounting plate	1
20	N01013	GB/T6170-1986 螺母	Nut M3	2
21	114245004	气源处理元件	Gas source processing component	1
22	S05005	螺钉 M5×12	Screw M5x12	2
23	407S04053	十字半圆头螺钉 M3×25	Screw M3x25	2
24	114245005	电磁阀	The electromagnetic valve	1

杰克缝纫机股份有限公司

杰克缝纫机

全球销量遥遥领先

公司地址(Address of Company）：

中国浙江省台州市椒江区三甲东海大道东段 1008 号

NO.1008 , DONGHAI AVENUE EAST，JIAOJIANG DISTRICT,TAIZHOU CITY , ZHEJIANG

邮编(Zip Code)：318000

国内销售部(Domestic Trade Department)：

电话(TEL)：0086-0576-88177788 88177789

传真(FAX)：0086-0576-88177758

国贸部(International Trade Department)：

电话(TEL)：0086-0576-88177782 88177774

传真(FAX)：0086-0576-88177787

服务热线：400-8876858

http://www.chinajack.com

请您扫下杰克服务号

www.chinajack.com

资料如有更改，恕不另行通知，以实物为准。

2020.4.28

You will be not informed if the file has been revised.Please set sample as standard.