JACK 杰克

快 速 服 务 100%

A4F 系列 **零件手册**

A4F Series **Parts Manual**

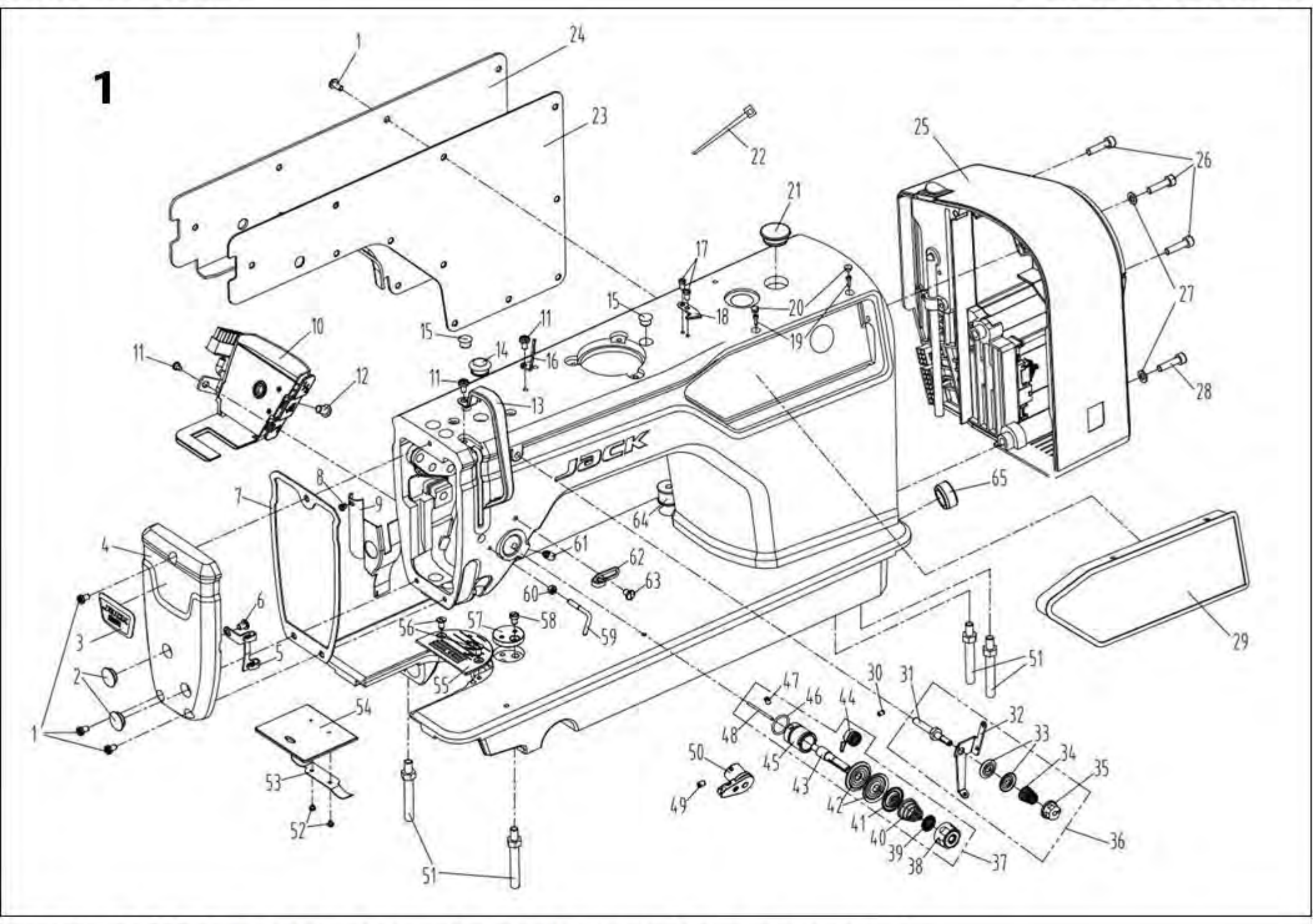

1. 机壳、外装部件/Machine Frame & Miscellaneous Cover Components

序号 NO	公司件号 Part NO	名称 PartName	零件描述 Description	数量 Number
1	101S11001	螺钉SM3/16"×28 L=9	Screw SM3/16"×28 L=9	14
2	10122003	面板调节孔螺塞	Rubber plug	2
3	115037001	商标牌	Head card	1
4	115001003	面板	Face plate asm	1
5	13813005	左线钩	Thread guide left	1
6	101S11007	螺钉SM11/64"×40 L=6	Screw SM11/64"×40 L=6	1
7	115022002	面板垫	Face plate gasket	1
8	101S11027	螺钉SM1/8"×44 L=3.4	Screw SM1/8"×44 L=3.4	1
9	113812019	面部防油板	Face oil shield asm	1
	11412082	面部防油板(厚料)	Face oil shield asm (H)	1
10	11503002900	倒缝开关组件(三开关)	Three switch components	1
11	101S11004	螺钉SM3/16"×28 L=7	Screw SM3/16"×28 L=7	3
12	101S11026	螺钉SM15/64"x28 L=9	Screw SM15/64"X28 L=9	1
13	13812018	挑线杆防护罩	Thread take-up lever cover	1
14	10122004	针杆曲柄螺孔塞	Rubber plug	1
15	10122005	挑线连杆销螺孔塞	Rubber plug	2
16	13512004	三孔线勾	3-hole thread guide	1
17	114S11015	螺钉SM9/64"×40 L=6	Screw SM9/64"×40 L=6	2
18	11419001	割线刀	Knife	1
19	138S05001	螺钉M3 L=12	Screw M3 L=12	2
20	13822001	操作屏孔塞	Rubber plug	2
21	20722002	油塞	Rubber plug	1
22	113811004	尼龙扎带	Cable band	3
23	115022001	后窗板垫	Side plate gasket	1
24	115412006	后窗板	Side plate	1
25	11503007300	一体机电控组件(Q)	Electronic control asm (Q)	1
	11543000600	一体机电控组件(25B)	Electronic control asm(25B)	1
26	114S13001	螺栓(内六角)M5 L=20	Screw M5 L=20	3
27	W01009	垫圈 5	Washer 5	2
28	114S30001	螺栓(内六角)M5×25	Screw M5×25	3
29	11503007400	一体机电控面板组件(Q)	Control panel (Q)	1
	11543000500	一体机电控面板组件(25B)	Control panel(25B)	1
30	138S08006	螺钉SM3/16"×28 L=7	Screw SM3/16"×28 L=7	1
31	13810008	小夹线器螺柱	Thread tension post	1
32	13812066	过线板	Thread tension guide plate	1
33	14112017	小夹线板	Thread tension disk	2
34	11227001	小夹线弹簧	Thread tension spring	1
35	141S16019	小夹线器螺母	Thread tension nut	1
36	1411300400	小夹线器组件	Thread tension asm	1
37	1411300300	夹线器组件	Thread tension asm	1
	1411300500	夹线器组件(厚料)	Thread tension asm (H)	1
38	141S16013	夹线螺母	Thread tension nut	1
39	10112007	夹线制动板	Thread disk rotating stopper	1
40	10127002	夹线弹簧	Thread tension spring A	1
	11427050	夹线弹簧(厚料)	Thread tension spring A (H)	1
41	14112016	松线板	Disk stopper	1
42	14112015	夹线板	Thread tension disk	2
43	141S30001	夹线螺钉	Thread tension post	1
44	10127001	挑线簧	Thread take-up spring	1
	10127031	挑线簧(厚料)	Thread take-up spring (H)	1
45	10103011	挑线簧调节座	Thread tension base	1
46	10122014	挑线簧调节座O型圈	Rubber ring	1
47	101S15005	螺钉SM9/64"x40 L=5.5	Screw SM9/64"x40 L=5.5	1
48	11326012	松线钉	Tension release pin	1
	10126002	松线钉(厚料)	Tension release pin (H)	1
49	207S14007	螺钉M4 L=6	Screw M4 L=6	1
50	1023000200	电子夹线器组件	Nest less e-device	1
51	101S12001	底板支柱	Machine head stud	4
52	101S11019	螺钉SM3/32"x56 L=2	Screw SM3/32"x56 L=2	2
53	10127009	推板簧	Slide plate spring	1
54	10115002	推板	Slide plate	1
55	13815011	针板	Needle plate	1
	11315001	针板(厚料)	Needle plate (H)	1
	10815001	针板(-7)	Needle plate (-7)	1
56	104S17002	螺钉SM11/64"×40 L=6.5	Screw SM11/64"×40 L=6.5	2
57	13812019	卷边器座	Ruler stop seat	1
58	101S11002	螺钉SM11/64"x40 L=5.5	Screw SM11/64"x40 L=5.5	1
59	11413011	固定式缓线钩	Thread guide	1
60	401S16001	螺母SM9/64"x40	Nut SM9/64"x40	1
61	101S15010	螺钉SM15/64"×28 L=10.5	Screw SM15/64"×28 L=10.5	1
62	10113004	右线钩	Thread guide right	1
63	101S11007	螺钉SM11/64"×40 L=6	Screw SM11/64"x40 L=6	1
64	10122110	橡皮塞(单孔)	Rubber plug	1
65	10122007	孔塞	Rubber plug	1

2

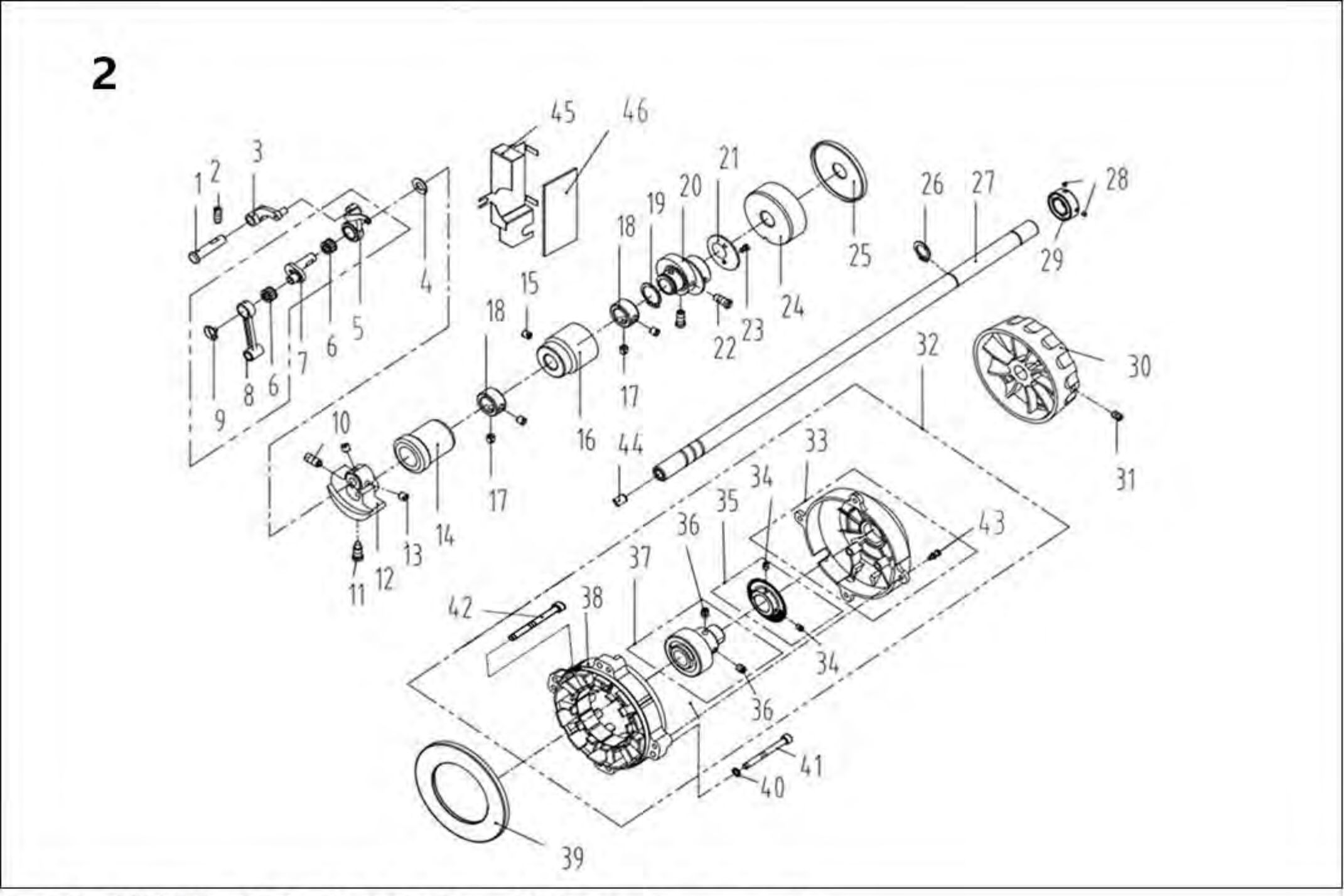

2. 上轴、挑线部件 /Main Shaft & Thread Take-up Components

序号 NO	公司件号 Part NO	名称 PartName	零件描述 Description	数量 Number
1	11326013	挑线连杆销	Thread take-up connecting rod pin	1
	10126001	挑线连杆销(H、H-M)	Thread take-up connecting rod pin(H、H-M)	1
2	101S15001	螺钉SM15/64"x28 L=15	Screw SM15/64"x28 L=15	1
3	10105001	挑线连杆	Thread take-up connecting rod	1
4	10112003	针杆曲柄护板	Needle bar crank protecting plate	1
5	1013800100	挑线杆分组件	Thread take-up lever asm	1
	1133800200	挑线杆组件(厚料)	Thread take-up lever asm (H)	1
6	10124001	挑线杆滚针轴承	Needle bearing	2
7	1011000100	挑线曲柄分部件	Thread take-up crank	1
	11310000	挑线曲柄分部件(H-M)	Thread take-up crank (H-M)	1
	1011000400	挑线曲柄(厚料)	Thread take-up crank (H)	1
8	10105002	针杆连杆	Needle bar connecting rod	1
9	101S17001	螺钉SM9/64"×40（左旋） L=4.8	Screw SM9/64"×40 (left hand) L=4.8	1
10	101S15004	紧固螺钉SM9/32"x28 L=16	Screw SM9/32"x28 L=16	1
11	101S11003	定位螺钉SM9/32"x28 L=16	Screw SM9/32"x28 L=16	1
12	113804014	针杆曲柄	Needle bar crank	1
	115404010	针杆曲柄(厚料)	Needle bar crank (H)	1
13	101S15002	螺钉SM1/4"x40 L=6	Screw SM1/4"x40 L=6	2
14	11380302600	上轴前轴套组件	Main shaft bushing front	1
	1140300200	上轴前轴套组件(厚料)	Main shaft bushing front (H)	1
15	101S15006	螺钉SM15/64"x28 L=7	Screw SM15/64"x28 L=7	1
16	12203002	主轴中轴套	Main shaft bushing mid	1
17	101S14001	螺钉SM1/4"×40 L=6	Screw SM1/4"×40 L=6	4
18	10108001	上轴挡圈	Main shaft thrust collar	2
19	H03002	挡圈20	Snap ring 20	1
20	400092	送料偏心轮	Feed eccentric cam	1
	400811	送料偏心轮(厚料、-7、-HL)	Feed eccentric cam (H、-7、-HL)	1
	400006	送料偏心轮(H-M)	Feed eccentric cam (H-M)	1
21	10112017	送料偏心轮盖板	Cover plate	1
	10812002	送料偏心轮盖板(厚料、-7、-HL)	Cover plate (H、-7、-HL)	1
22	101S11013	螺钉SM1/4"x40 L=13	Screw SM1/4"x40 L=13	2
	207S11018	螺钉5 L=10	Screw M5 L=10	2
23	113S11003	螺钉SM9/64"x40 L=5	Screw SM9/64"x40 L=5	2
24	13803002	上轴后轴套	The rear axle sleeve	1
25	10122105	上轴后套挡油油封	Oil seal	1
26	H03001	GB/T894.1-1986挡圈15	Snap ring 15	1
27	10202002	上轴	Main shaft	1
28	S10013	GB/T80-1985螺钉M6 L=6	Screw M6 L=6	2
29	10208001	电机防尘套	Motor dust jacket	1
30	302830	手轮(喷漆)	Handwheel	1
31	S10009	螺钉M6 L=8	Screw M6 L=8	2
32	110233015	光电伺服电机	Motor	1
33	95111049	电机罩壳组件	Motor cover asm	1
34	S09022	螺钉M3 L=4	Screw M3 L=4	2
35	95100116	电机光栅组件（A2）	Motor grating sensor asm	1
36	S09113	螺钉M6 L=6	Screw M6 L=6	2
37	195100324	电机转子总成	Motor rotor	1
38	195100323	电机定子总成	Motor stator	1
39	95211058	电机绝缘防护罩	Motor insulation shield	1
40	W02058	GB 93-1987弹垫d5	Spring washer 5	3
41	951S15010	螺钉组合件M5 L=20	Screw M5 L=20	3
42	114S13001	螺栓(内六角)M5 L=20	Screw M5 L=20	1
43	951S15016	螺钉组合件M4 L=28	Screw asm M3 L=28	4
44	10122012	上轴孔塞	Rubber plug	1
45	115012007	防油罩	Oil shield	1
46	14123001	防油罩油棉	Oil cotton	1

3

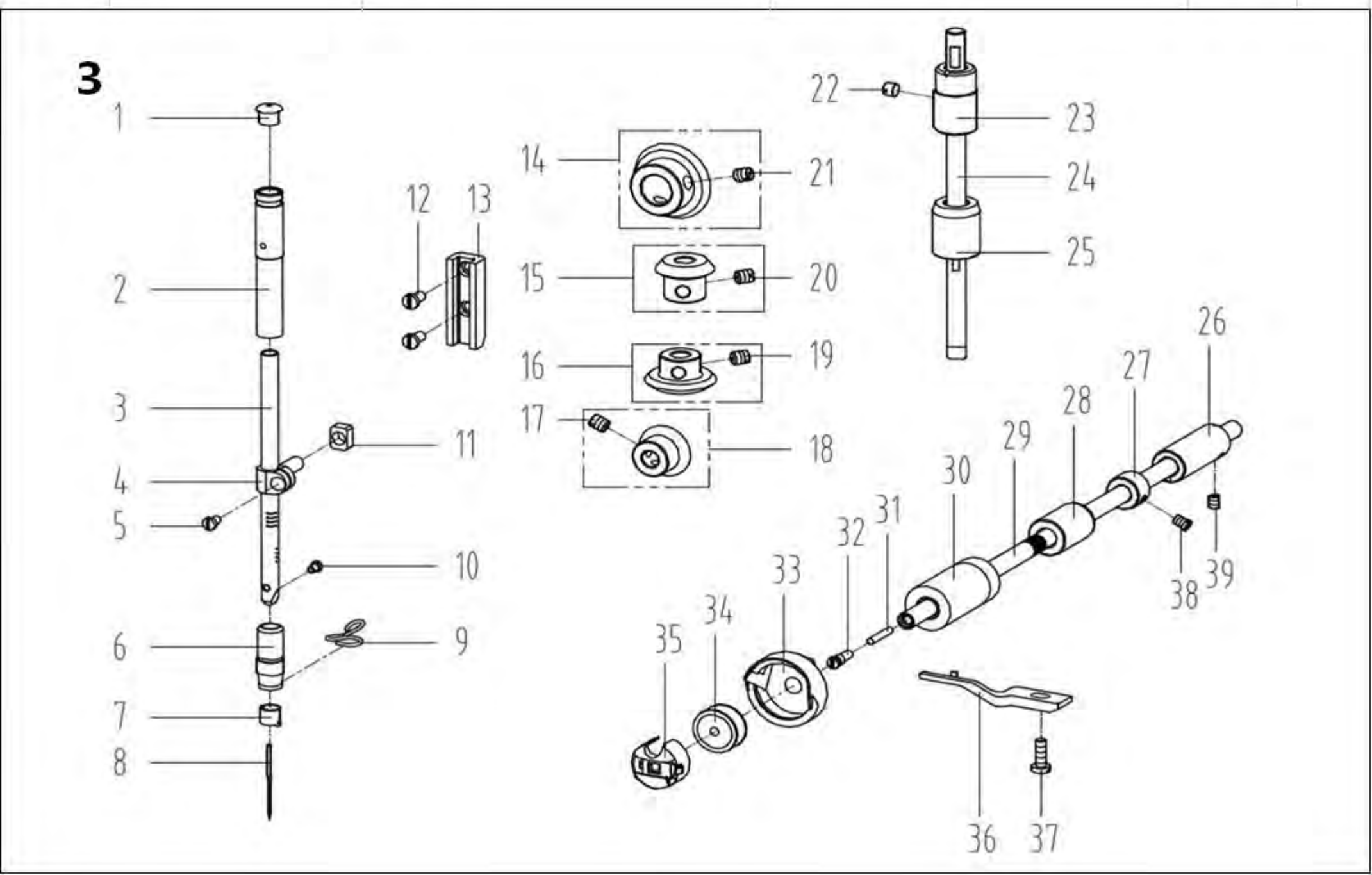

3. 针杆、竖轴、下轴部件/Needle bar & Upright Shaft & Hook Driving Shaft Components

序号 NO	公司件号 Part NO	名称 PartName	零件描述 Description	数量 Number
1	10122013	针杆上衬套孔塞	Rubber plug	1
2	14103009	针杆上衬套	Needle bar bushing upper	1
	10103009	针杆上衬套 (厚料)	Needle bar bushing upper (H)	1
3	11402039	针杆	Needle bar	1
	10102021	针杆(厚料)	Needle bar (H)	1
4	10138002	针杆连接柱	Needle bar connecting rod	1
5	101S11005	螺钉SM9/64"x40 L=6	Screw SM9/64"x40 L=6	1
6	10103010	针杆下衬套	Needle bar bushing lower	1
	11303023	针杆下衬套(厚料)	Needle bar bushing lower (H)	1
7	10113002	针杆线勾	Needle bar thread guide	1
	11412063	针杆线勾(厚料)	Needle bar thread guide (H)	1
8	10117001	机针DB×1 #14	Needle DB×1 #14	1
	10117002	机针DP×5 #21(厚料)	Needle DP×5 #21 (H)	1
9	10413001	针杆下衬套线勾	Lower bushing thread guide	1
	10113009	针杆下衬套线钩(厚料)	Lower bushing thread guide (H)	1
10	104S11006	螺钉SM1/8"x44 L=4.5	Screw SM1/8"x44 L=4.5	1
11	10109001	针杆连接柱滑块	Slide block	1
12	101S11008	螺钉SM11/64"x40 L=8	Screw SM11/64"x40 L=8	2
13	10109002	针杆接头滑块导轨	Needle bar guide	1
14	10425004	上轴伞齿轮	Upper shaft bevel gear	1
15	10425003	竖轴上伞齿轮	Upper small bevel gear asm	1
16	10425002	竖轴下伞齿轮	lower large bevel gear asm	1
17	101S15014	螺钉SM1/4"x40 L=7	Screw SM1/4"x40 L=7	2
18	10425001	下轴伞齿轮	Hook drive shaft bevel gear	1
19	101S15014	螺钉SM1/4"x40 L=7	Screw SM1/4"x40 L=7	2
20	101S15014	螺钉SM1/4"x40 L=7	Screw SM1/4"x40 L=7	2
21	101S15014	螺钉SM1/4"x40 L=7	Screw SM1/4"x40 L=7	2
22	113S11036	螺钉SM15/64"x28 L=4.7	Screw SM15/64"x28 L=4.7	1
23	113803012	竖轴上轴套	Upright shaft bushing upper	1
24	115002008	竖轴	Upright shaft	1
25	10403013	竖轴下轴套	Upright shaft bushing lower	1
26	113803014	下轴后轴套	Hook driving shaft bushing back	1
27	115008002	下轴挡圈	Hook driving shaft snap ring	1
28	115003001	下轴中套	Lower shaft middle bushing	1
29	13802061	下轴	Hook driving shaft	1
30	11303001	下轴前轴套	Hook driving shaft bushing front	1
31	13823001	下轴限油芯	Oil wick	1
32	101S30005	下轴限油螺钉	set screw	1
33	11418003	广濑中厚料旋梭	Hook asm (Hirose)	1
	11418004	广濑厚料旋梭(厚料)	Hook asm (Hirose) (H)	1
34	10118003	梭心	Bobbin	1
35	11218504	梭壳	Bobbin case asm	1
36	10112016	旋梭定位钩	Finger postioner	1
	10112032	旋梭定位钩(厚料)	Finger postioner (H)	1
37	116S11005	螺钉SM11/64"×40 L=13	Screw SM11/64"×40 L=13	1
38	101S11012	螺钉SM11/64"×40 L=4.8	Screw SM11/64"×40 L=4.8	2
39	113S14020	螺钉SM11/64"×40 L=6	Screw SM11/64"×40 L=6	1

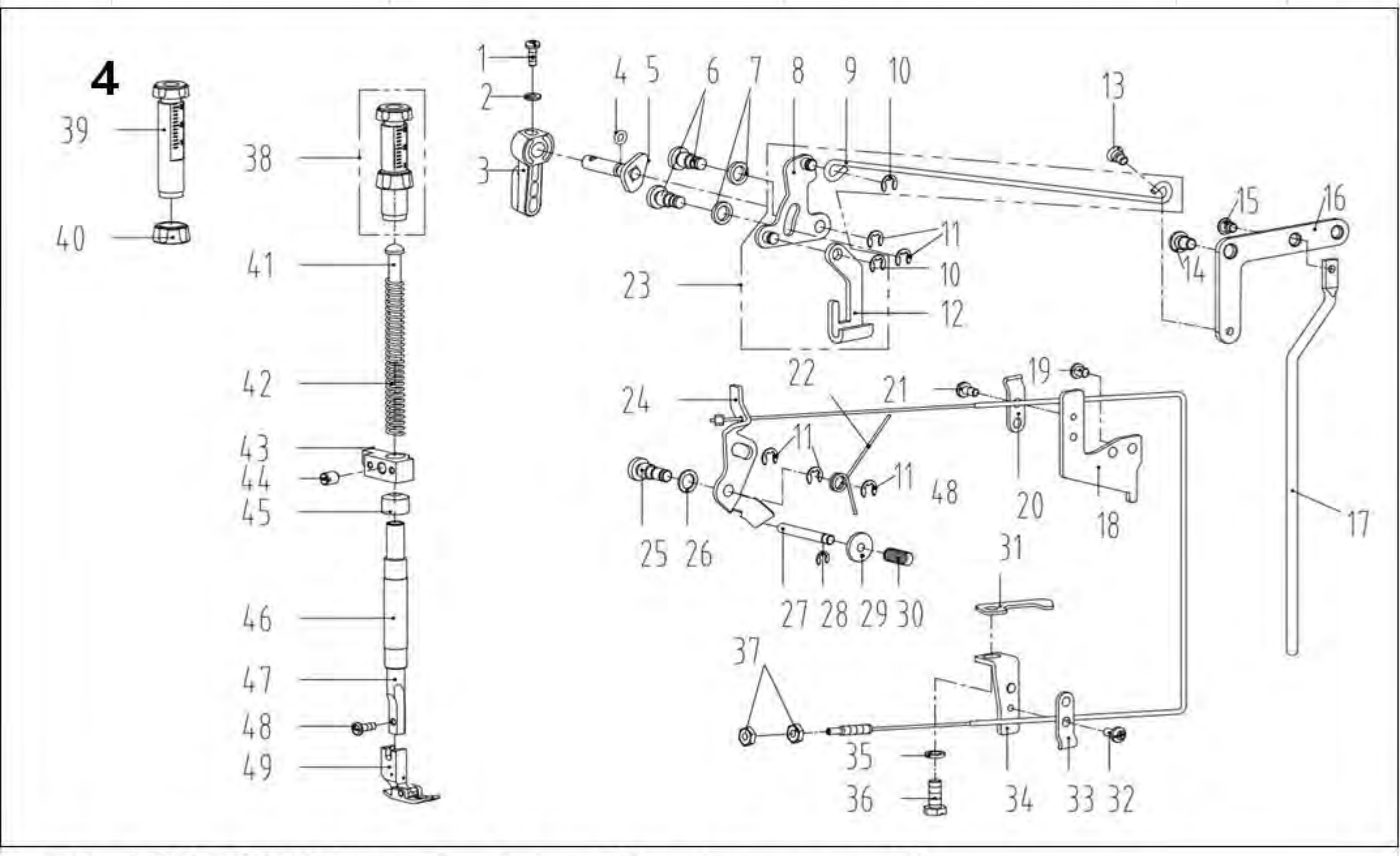

4. 压料、自动抬压脚部件/Presser Bar & Auto Lifter Components（1）

序号 NO	公司件号 Part NO	名称 PartName	零件描述 Description	数量 Number
1	101S11010	螺钉SM9/64"x40 L=11	Screw SM9/64"x40 L=11	1
2	10128002	压脚扳手螺钉垫圈	Washer	1
3	13811029	压脚扳手	Hand lifter	1
4	O01004	O型圈	Rubber ring	1
5	1381000200	压脚扳手凸轮分部件	Hand lifter cam asm.	1
6	101S20001	前杠杆螺纹销	Screw	2
7	10128015	螺纹销橡胶垫圈(厚)	Washer	2
8	1381203000	抬压脚前杠杆分部件	Lift front lever component	1
9	10112013	抬压脚拉杆	Knee lifter pull rod	1
10	H05003	开口挡圈 5	Snap ring 5	2
11	11329020	开口挡圈 5	Snap ring 5	5
12	10112010	压脚升降板	Lifting plate	1
13	101S20004	抬压脚拉杆螺钉SM3/16"x32	Hinge Screw SM3/16"x32	1
14	101S20003	后杠杆轴位螺钉SM15/64"x28	Hinge screw SM15/64"x28	1
15	144S20003	抬压脚顶杆轴位螺钉SM3/16"x32	Hinge Screw SM3/16"x32	1
16	115412002	抬压脚后杠杆	Knee lifter back lever	1
17	10111005	抬压脚顶杆	Knee lifter connecting rod	1
18	11212009	松线导管上支架	Wire release bracket upper	1
19	101S11004	螺钉SM3/16"×28 L=7	Screw SM3/16"x28 L=7	1
20	11212008	松线导管压板	Wire release press plate	1
21	113S11004	螺钉M4 L=8	Screw M4 L=8	1
22	11427009	松线顶板复位簧	Reset spring	1
23	1381203200	抬压脚前杠杆组件	Knee lifter lever asm	1
24	1141206000	松线顶板组件	Wire release plate asm	1
25	101S20002	松线顶板螺纹销	Wire release plate pin	1
26	10128015	螺纹销橡胶垫圈(厚)	Washer	1
27	10126003	松线辅钉	Thread release supporting pin	1
28	H05012	开口挡圈 4	Snap ring 4	1
29	10128001	松线辅钉垫片	washer	1
30	10127003	松线辅钉弹簧	Spring	1
31	10112022	旋梭供油管压板	Tube press plate	1
32	113S11004	螺钉M4 L=8	Screw M4 L=8	1
33	11212008	松线导管压板	Wire presser	1
34	115012003	松线导管下支架	Wire release bracket lower	1
35	W02004	弹性垫圈	Spring washer	1
36	116S30003	螺钉SM15/64"x28 L=14.5	Screw SM15/64"x28 L=14.5	1
37	113S12001	螺母SM3/16"x32	Nut SM3/16"x32	2
38	11381101800	调压螺钉组件	Presser regulating screw nut asm	1
39	1138NS30003	调压螺钉(厚料)	Press regulating screw (H)	1
40	1138NS16005	调压螺母(厚料)	Press regulating nut (H)	1
41	10102003	调压导杆	Press regulating guide bar	1
42	113827010	调压簧	Press regulating spring	1
	10127024	调压簧(厚料)	Press regulating spring (H)	1

4. 压料、自动抬压脚部件/Presser Bar & Auto Lifter Components（2）

43	13809030	压杆导架	Presser bar guide bracket	1
44	101S15007	螺钉SM15/64"x28 L=14.5	Screw SM1/4"x40 L=8	1
45	10122112	压杆防油套	Pressure bar oil cover	1
46	113803007	压杆下衬套	Presser bar bushing,lower	1
47	10102004	压杆	Presser bar	1
48	101S11009	螺钉 SM9/64"x40 L=10.5	Screw SM9/64"x40 L=10.5	1
49	1131600600	压脚组件	Presser foot asm	1
	1131600300	压脚组件(厚料)	Presser foot asm (H)	1

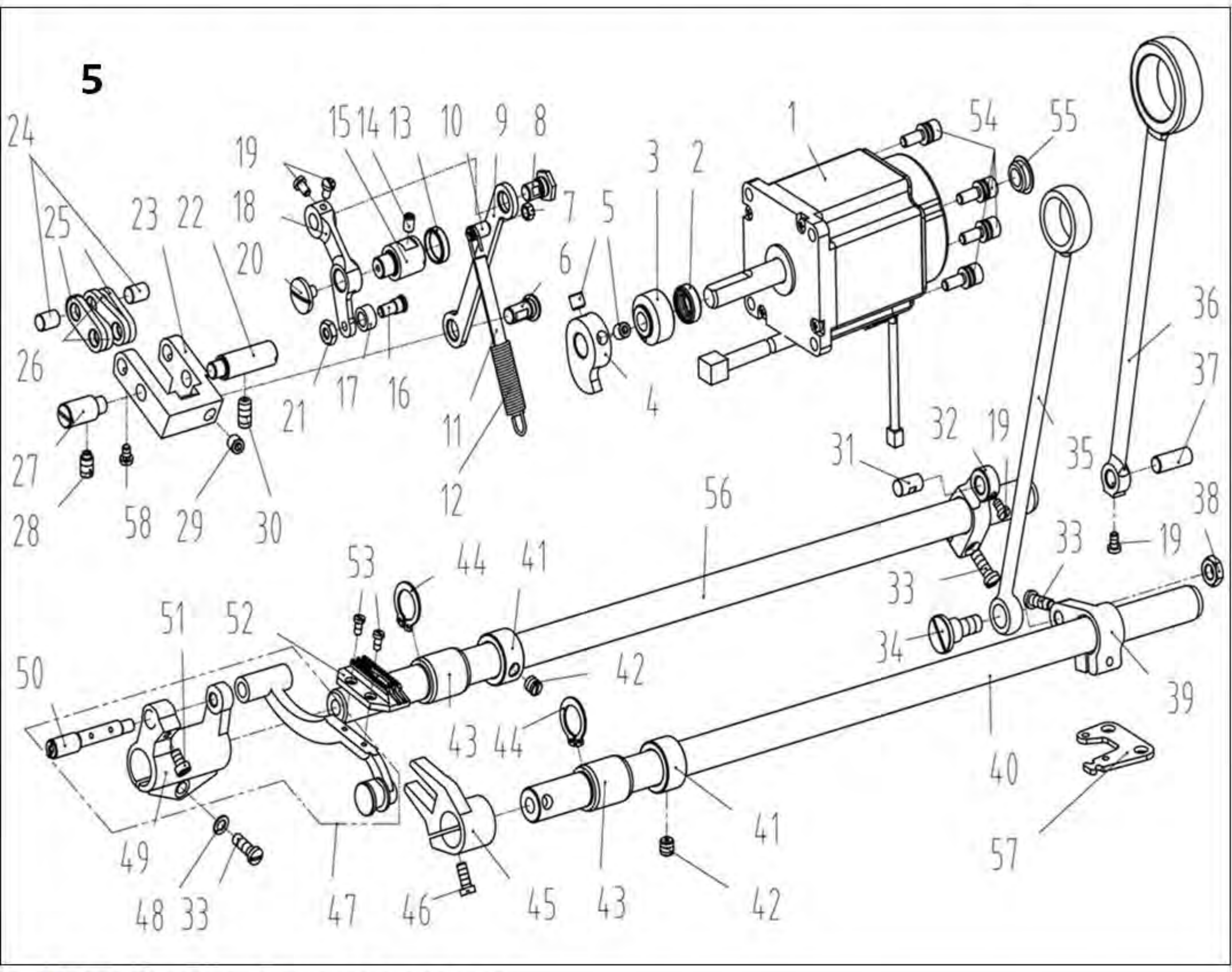

5. 送料部件/Feed Mechanism Components

序号 NO	公司件号 Part NO	名称 PartName	零件描述 Description	数量 Number
1	115033006	步进电机	Stepper motor	1
	115433002	步进电机(厚料、-7)	Stepper motor (H、-7)	1
2	114922002	步进电机轴套油封Φ10×Φ16×5	Stepper motor bushing oil seal	1
3	114903001	步进电机轴套	Stepper motor bushing	1
4	115410001	针距凸轮	Needle pitch cam	1
	115410003	针距凸轮(-7)	Needle pitch cam (-7)	1
5	S10028	螺钉M5 L=6(进口)	Screw M5 L=6	2
6	114926001	针距曲柄销	Needl gage crank pin	1
7	114S16004	螺母SM11/64"x40	Nut SM11/64"x40	1
8	115426001	针距曲柄销	Needl gage crank pin	1
9	115405001	针距调节连杆	Needle pitch adjusting link	1
10	114S30007	弹簧悬置螺钉	Spring mounting screw	1
12	115427001	针距复位簧	Pitch reset spring	1
	115427003	针距复位簧(-7)	Pitch reset spring (-7)	1
13	20628023	防油塞	Oil proof plug	1
14	138S08006	螺钉SM3/16"×28 L=7	Screw SM3/16"×28 L=7	1
15	115426003	针距曲柄支撑销	Pitch crank support pin	1
16	136S20003	滚轮螺钉	Roller screw	1
17	13609002	滚轮	Roller	1
18	115404003	针距曲柄	Needl gage crank pin	1
19	101S11005	螺钉SM9/64"×40 L=6	Screw SM9/64"×40 L=6	4
20	101S11023	送料调节器轴端螺钉	Feed regulator shaft end screw	1
21	136S17005	滚轮螺母	Roller nut	1
22	10126010	送料摆动板座右销	Right pin	1
23	114901001	送料摆动板座	Feed shaking plate	1
24	10126007	短摆动板连杆销	Connecting pin	2
25	10109005	送料短摆动板	Feed short shaking plate	2
	13809007	送料短摆动板(厚料)	Feed short shaking plate (H)	2
	11412022	送料短摆动板(-7)	Feed short shaking plate (-7)	2
26	10109004	送料长摆动板	Feed long shaking plate	2
	13809008	送料长摆动板(厚料、-7)	Feed long shaking plate (H、-7)	2
27	10126009	送料摆动板座左销	Left pin	1
28	101S15010	螺钉SM15/64"x28 L=10.5	Screw SM15/64"x28 L=10.5	1
29	101S14001	螺钉SM1/4"×40 L=6	Screw SM1/4"×40 L=6	1
30	113S14010	螺钉SM15/64"x28 L=12	Screw SM15/64"x28 L=12	1
31	10126011	送料曲柄销	Feed rocker crank pin	1
32	10104002	送料曲柄	Feed rocker shaft crank	1
33	101S11016	螺钉SM3/16"x28 L=14	Screw SM3/16"x28 L=14	3
34	101S20005	抬牙连杆轴位螺钉SM9/32"x28	hinge Screw SM9/32"x28	1
35	115405003	抬牙连杆	Connecting rod	1
36	115405002	送料连杆	Rocker shaft connecting rod	1
	115405004	送料连杆(厚料、-7)	Rocker shaft connecting rod (H、-7)	1
37	10126006	送料连杆销	Connecting rod pin	1
38	101S16003	抬牙连杆轴位螺母 SM9/32"x28	Hinge Screw SM9/32"x28	1
39	10104004	抬牙后曲柄	Feed driving shaft crank	1
40	13802001	抬牙轴	Feed driving shaft	1
41	10108003	送料轴挡圈	Feed rocker shaft snap ring	2
42	101S15002	螺钉SM1/4"x40 L=6	Screw SM1/4"x40 L=6	4
43	10403015	轴套	Bushing	2
44	H03001	GB/T894.1-1986挡圈 15	Snap ring 15	2
45	113804011	抬牙叉形曲柄	Driving shaft crank	1
46	1138NS30004	螺钉SM11/64"x40 L=10.5	Screw SM11/64"x40 L=10.5	1
47	400672	牙架组件	Feed bar asm	1
	11380700300	牙架座组件(厚料、-7)	Feed bar asm (H、-7)	1
48	10128003	牙架座螺钉垫圈	Washer	1
49	480095	牙架座	Feed bar bed	1
50	10401007	牙架销(自制)	Feed bar pin	1
51	101S11025	螺钉SM11/64"x40 L=7	Screw SM11/64"x40 L=7	1
52	13814005	送料牙	Feed dog	1
	11314001	送料牙(厚料)	Feed dog (H)	1
	11414001	送料牙(-7)	Feed dog (-7)	1
53	101S11018	螺钉 SM1/8"x44 L=6	Screw SM1/8"x44 L=6	2
54	1150NS13002	螺钉SM3/16"x28 L=10	Screw SM3/16"x28 L=10	4
55	10122003	面板调节孔螺塞	Rubber plug	1
56	10102008	送料轴	Feed rocker shaft	1
57	13812081	拉簧固定板	Spring fixing plate	1
58	101S11005	螺钉SM9/64"x40 L=6	Screw SM9/64"x40 L=6	2
	114S11015	螺钉SM9/64"×40 L=6(厚料)	Screw SM9/64"×40 L=6(H)	2

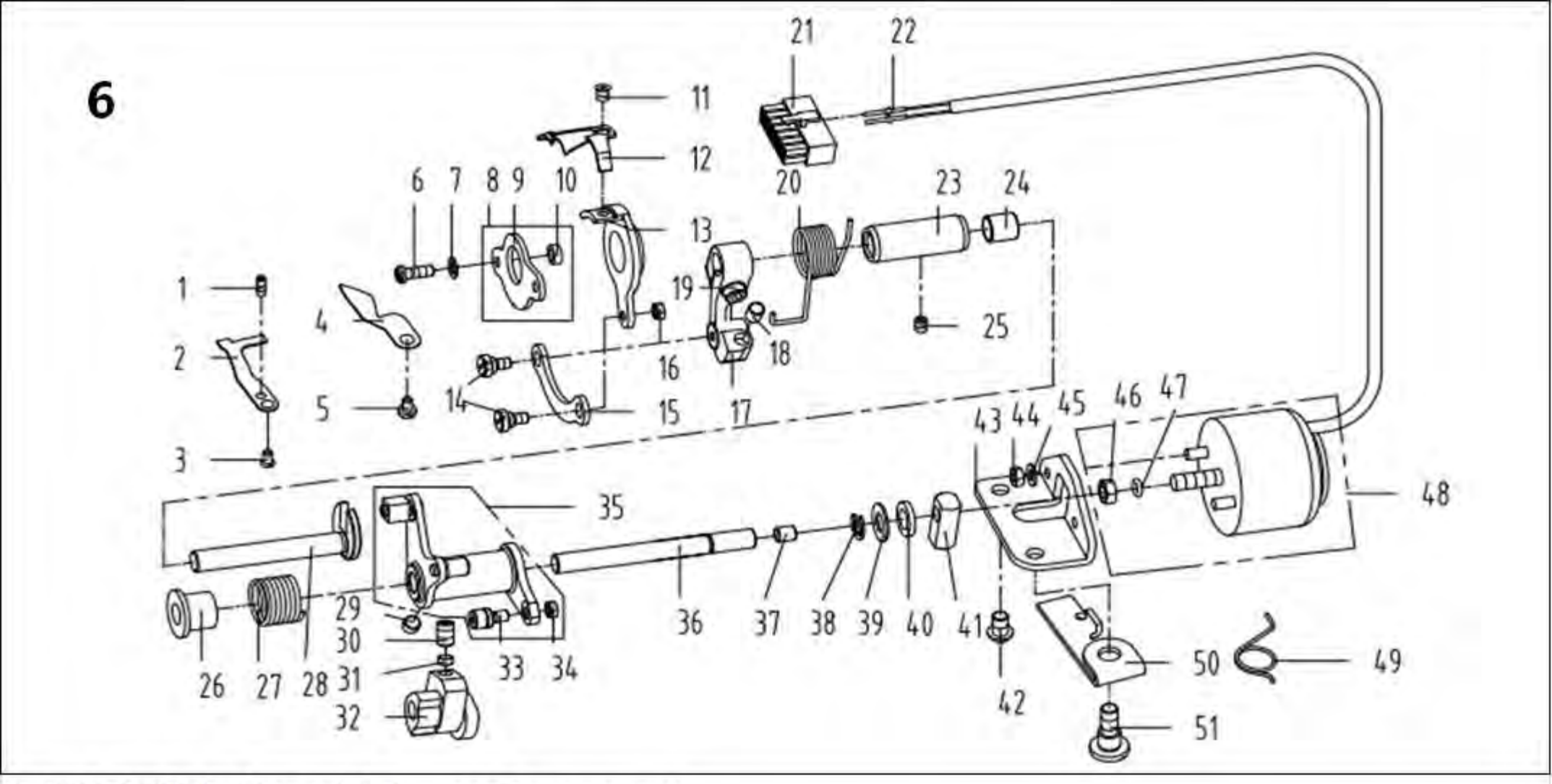

6. 切线装置部件/Thread Trimmer Components

序号NO	公司件号 Part NO	名称 PartName	零件描述 Description	数量 Number
1	113S15002	螺钉SM1/8"x44 L=9.5	Screw SM1/8"x44 L=9.5	1
2	115019001	定刀	Secant knife	1
3	113S17001	螺钉SM9/64×40 L=6	Screw SM9/64×40 L=6	1
4	113813029	分线片	Needle guard patch	1
5	201S11009	螺钉SM9/64"x40 L=5.5	Screw SM9/64"x40 L=5.5	1
6	113S11001	螺钉SM11/64"x40 L=12	Screw SM11/64"x40 L=12	2
7	10128003	牙架座螺钉垫圈	Washer	2
8	1381203100	刀架压板组件	Knife bracket press component	1
9	13812031	刀架压板	Knife bracket press	1
10	13803012	短套	Short bushing	2
11	113S17002	螺钉SM11/64"x40 L=4.4	Screw SM11/64"x40 L=4.4	2
12	14019004	活动刀	Motorial knife	1
	11319003	活动刀(厚料)	Motorial knife (H)	1
13	11307001	剪线刀架	Knife bracket	1
14	113S20001	螺钉SM11/64×40 L=6.5	Screw SM11/64×40 L=6.5	2
15	11312005	连杆	Connecting rod	1
16	114S16004	螺母SM11/64"x40	Nut SM11/64"x40	1
17	11304001	曲柄	Crank	1
18	113822014	驱动曲柄止动块	Crank driver stopper block	1
19	S05004	螺钉M5 L=14	Screw M5 L=14	1
20	11327001	弹簧	Spring	1
21	11230004	14孔接线器	Plug	1
22	11230005	电线插针	Pin	1
23	11303003	切线轴套	Thread cutting shaft bushing	1
24	11503005	驱动曲柄轴衬套	Crank drive shaft bushing	1
25	113S14020	螺钉SM11/64"x40 L=6	Screw SM11/64"x40 L=6	1
26	11322002	扭簧端盖	Spring cover	1
27	11327002	弹簧	Spring	1
28	11304002	切线凸轮曲柄轴	Crank shaft	1
29	101S14001	螺钉SM1/4"×40 L=6	Screw SM1/4"×40 L=6	1
30	116S14005	螺钉SM1/4"x40 L=10	Screw SM1/4"x40 L=10	2
31	11309030	凸轮顶柱	Push rod	2
32	11310004	凸轮	Cam	1
	11310011	凸轮(厚料)	Cam (H)	1
33	11324001	滚柱	Roolling pin	1
34	1138NS16007	螺母SM11/64"x40	Nut SM11/64"x40	1
35	1130400500	剪线驱动组件	Thread trimmer drive asm	1
36	11302002	轴	Shaft	1
37	11322001	驱动曲柄止动块	Positioning block	1
38	H05013	GB/T896-1986挡圈6	Snap ring 6	1
39	10112003	针杆曲柄护板	Cunter weight protecting	1
40	11322003	电磁铁缓冲垫	Solenoid cushion rubber	1
41	11309001	切线电磁铁顶销	Solenoid pin	1
42	101S11026	螺钉SM15/64"x28 L=9	Screw SM15/64"x28 L=9	1
43	11312006	切线磁铁支架	Solenoid bracket	1
44	N01005	螺母 M4	Nut M4	2
45	W02018	GB/T93-1987弹簧垫圈4	Washer 4	2
46	112S16006	螺母SM1/4"X40	Nut SM1/4"X40	1
47	113822005	垫圈	Washer	1
48	1383003300	剪线电磁铁组件	Thread trimmer solenoid asm.	1
49	11327003	弹簧	Spring	1
50	115012004	松线座	Thread release bed	1
51	113S20002	螺钉SM1/4×28 L=13	Screw SM1/4×28 L=13	1

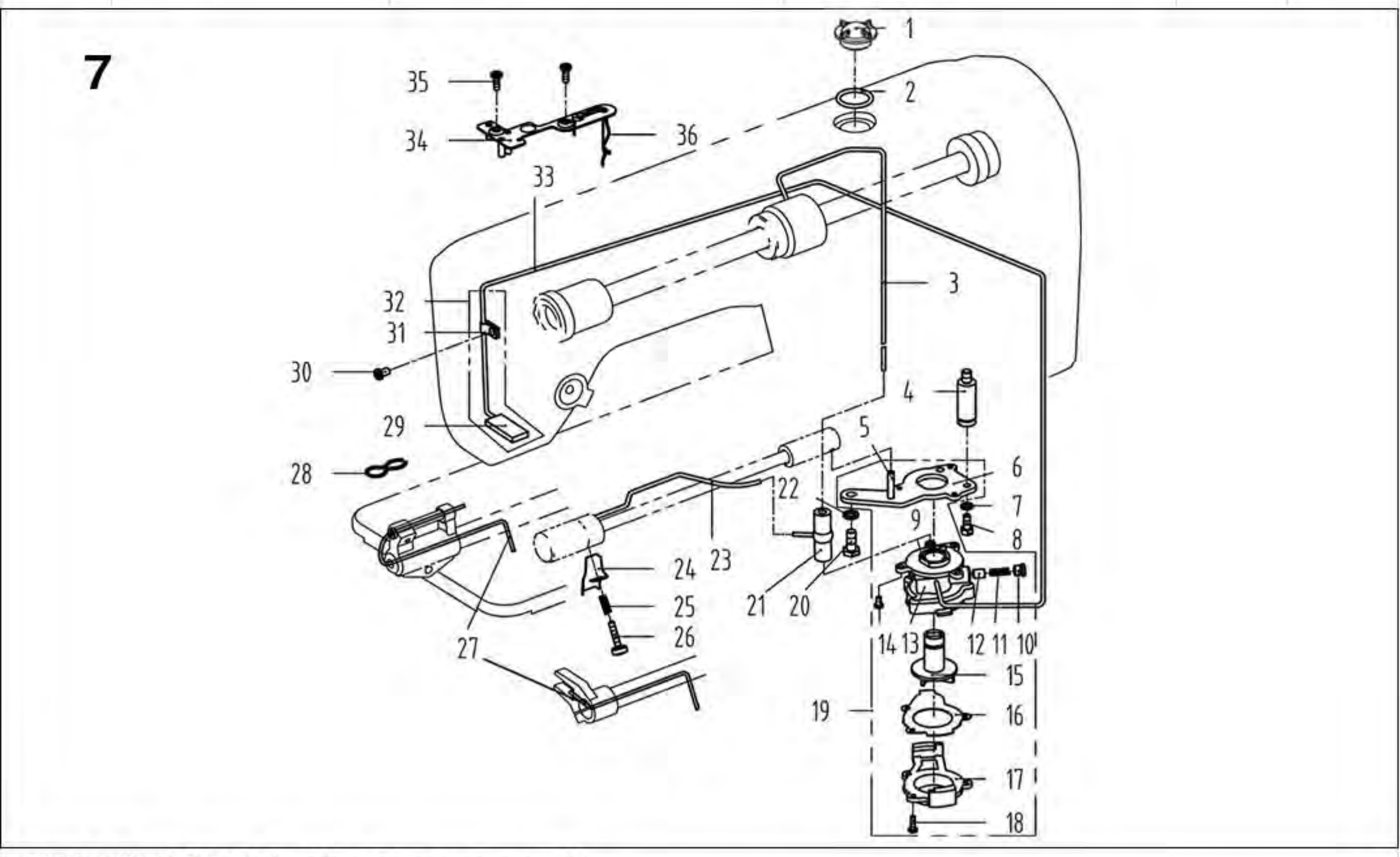

7. 润滑部件/Oil Lubrication Components(1)

序号 NO	公司件号 Part NO	名称 PartName	零件描述 Description	数量 Number
1	10111004	油窗	Oil sight window	1
2	10122019	油窗O形圈	Rubber ring	1
3	14121001	上轴供油管	Main shaft oil tube	1
4	101S30008	油泵连接螺柱	Oil pump connecting stud	1
5	10121001	供油管	Hook oil tube	1
6	10112020	油泵安装板	Oil pump installing base	1
7	W03002	弹簧垫圈 5	Spring washer 5	1
8	209S12001	螺钉SM11/64"×40 L=10.5	Screw SM11/64"×40 L=10.5	1
9	10103022	油泵体衬套	Oil pump bushing	1
10	101S30007	柱塞螺钉	Plunger Screw	1
11	10127013	柱塞簧	Plunger spring	1
12	10122018	回油柱塞	Plunger	1
13	10120001	油泵体	Oil pump	1
14	S04093	油泵螺钉M3 L=6	Screw M3 L=6	3
15	10111003	油泵叶轮	Oil pump impeller	1
16	10112021	油泵叶轮托板	Oil pump impeller cover	1
17	10111007	油泵盖	Lubricating oil pump cover	1
18	101S30006	螺钉ST2.9 L=10	Screw ST2.9 L=10	3
19	1012000100	油泵分部件	Lubricating oil pump component	1

7. 润滑部件/Oil Lubrication Components(2)

序号 NO	公司件号 Part NO	名称 PartName	零件描述 Description	数量 Number
20	116S30003	螺钉SM15/64"×28 L=14.5	Screw SM15/64"×28 L=14.5	1
21	10136001	供油管接头	Rubber joint	1
22	W02004	GB/T93-1987弹垫M6	Spring Washer M6	1
23	13821015	下轴供油管	Hook oil tube	1
24	11312031	挡油罩	Oil shield cover	1
25	13827014	油量调节螺钉弹簧	Spring	1
26	113S30001	螺钉SM11/64×40 L=19	Screw SM11/64×40 L=19	1
27	10423005	油线	Oil wick	2
28	10127015	回油毡夹	Oil felt clamp	1
29	10123006	回油毡	Oil felt felt	1
30	101S11004	螺钉SM3/16"×28 L=7	Screw SM3/16"×28 L=7	1
31	10112023	回油管夹	Oil tube clamp	1
32	11502100100	回油管部件	Oil return tube component	1
33	115021002	回油管	Oil return tube	1
34	10112025	油线固定板	Oil wick fixing plate	1
35	101S11010	螺钉SM9/64"×40 L=11	Screw SM9/64"×40 L=11	2
36	10123010	油线	Oil wick	1

8

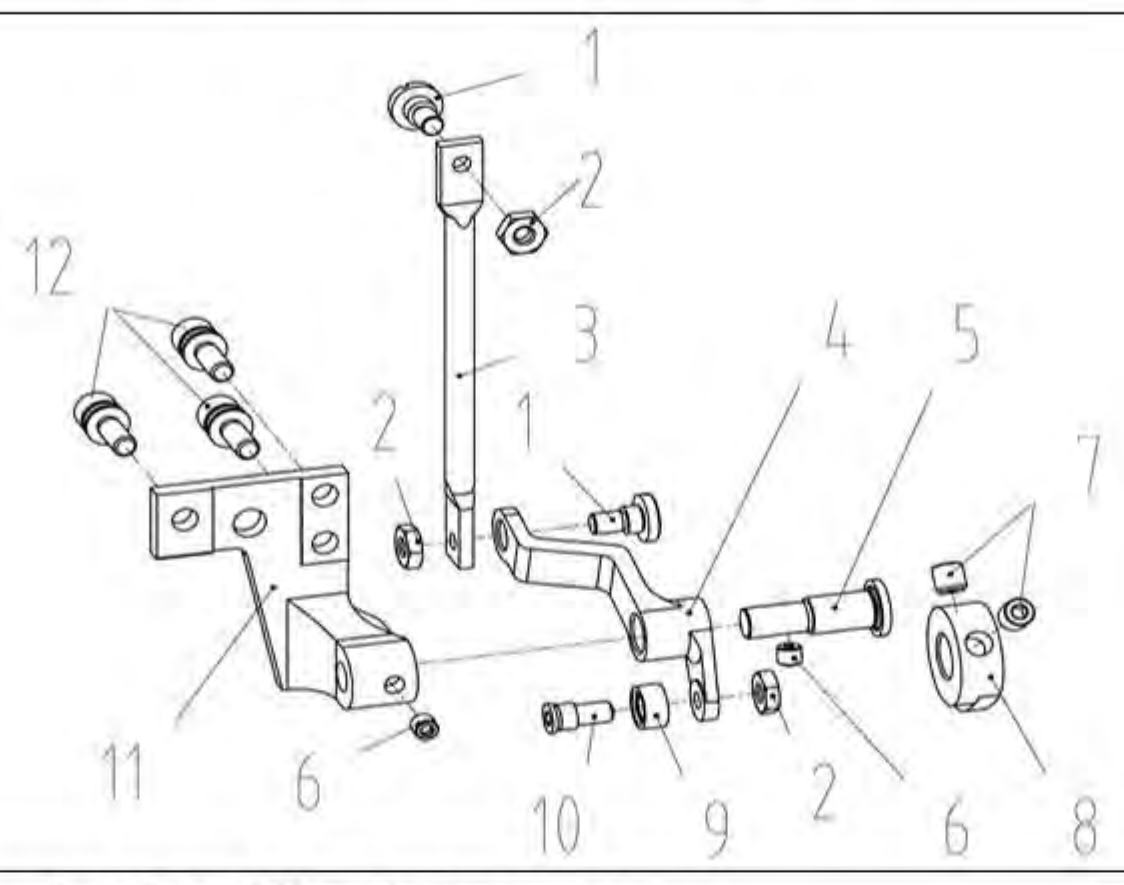

8. 步进抬压脚部件/Stepping Auto Lifter Components

序号 NO	公司件号 Part NO	名称 PartName	零件描述 Description	数量 Number
1	1150NS20001	抬压脚顶杆螺钉	Presser foot lifter screw	2
2	136S17005	滚轮螺母	Roller nut	3
3	115412001	自动抬压脚顶杆	Automatic presser foot lifter	1
4	115404002	抬压脚驱动曲柄	Driving crank of presser foot	1
5	115426002	抬压脚驱动曲柄销	Lifting presser foot to drive crank pin	1
6	S10014	螺钉M5 L=4	Screw M5 L=4	2
7	S10028	螺钉M5 L=6(进口)	Screw M5 L=6	2
8	115410002	抬压脚凸轮	Presser foot cam	1
9	13609002	滚轮	Roller	1
10	136S20003	滚轮螺钉	Roller screw	1
11	115401001	抬压脚曲柄支架	Crank bracket for presser foot lifting	1
12	1150NS13002	螺钉SM3/16"x28 L=10	Screw SM3/16"x28 L=10	3

9

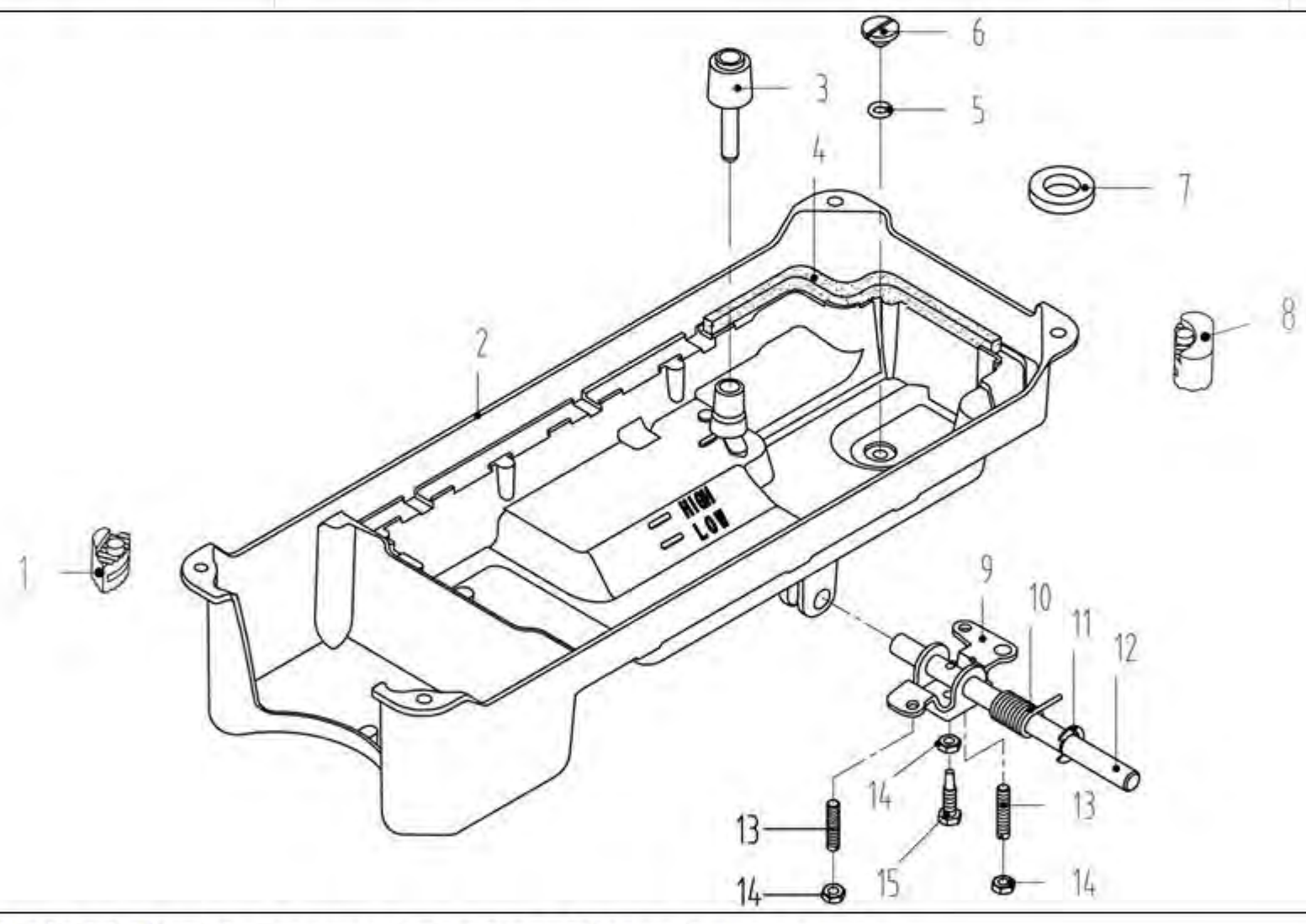

9. 油盘、膝抬压脚分组件/Oil Ceservoir & Knee Lifter Components

序号 NO	公司件号 Part NO	名称 PartName	零件描述 Description	数量 Number
1	115022007	油盘座垫	Oil reservoir rubber cushion	2
2	13801020	油盘	Oil Reservoir	1
3	10111005	抬压脚顶杆	Knee lifter push rod	1
4	10122020	油盘垫	Oil Reservoir gasket	1
5	10122021	O型圈	Rubber ring	1
6	101S11028	螺钉SM5/16"×24 L=7	Screw SM5/16"×24 L=7	1
7	10131001	油盘磁铁	Oil reservoir magnet	1
8	115022008	油盘支架	Oil reservoir rubber cushion	2
9	10112027	抬压脚双向曲柄	Knee lifter crank	1
10	10127016	双向曲柄扭簧	Knee lifter spring	1
11	H05010	GB/T896-1986挡圈9	Snap ring 9	1
12	10102011	抬压脚轴	Knee lifter shaft	1
13	101S15012	螺钉M6 L=30	Screw M6 L=30	2
14	101S16004	螺母M6 L=4	Nut M6 L=4	3
15	101S12002	螺钉M6 L=26	Screw M6 L=26	1

10

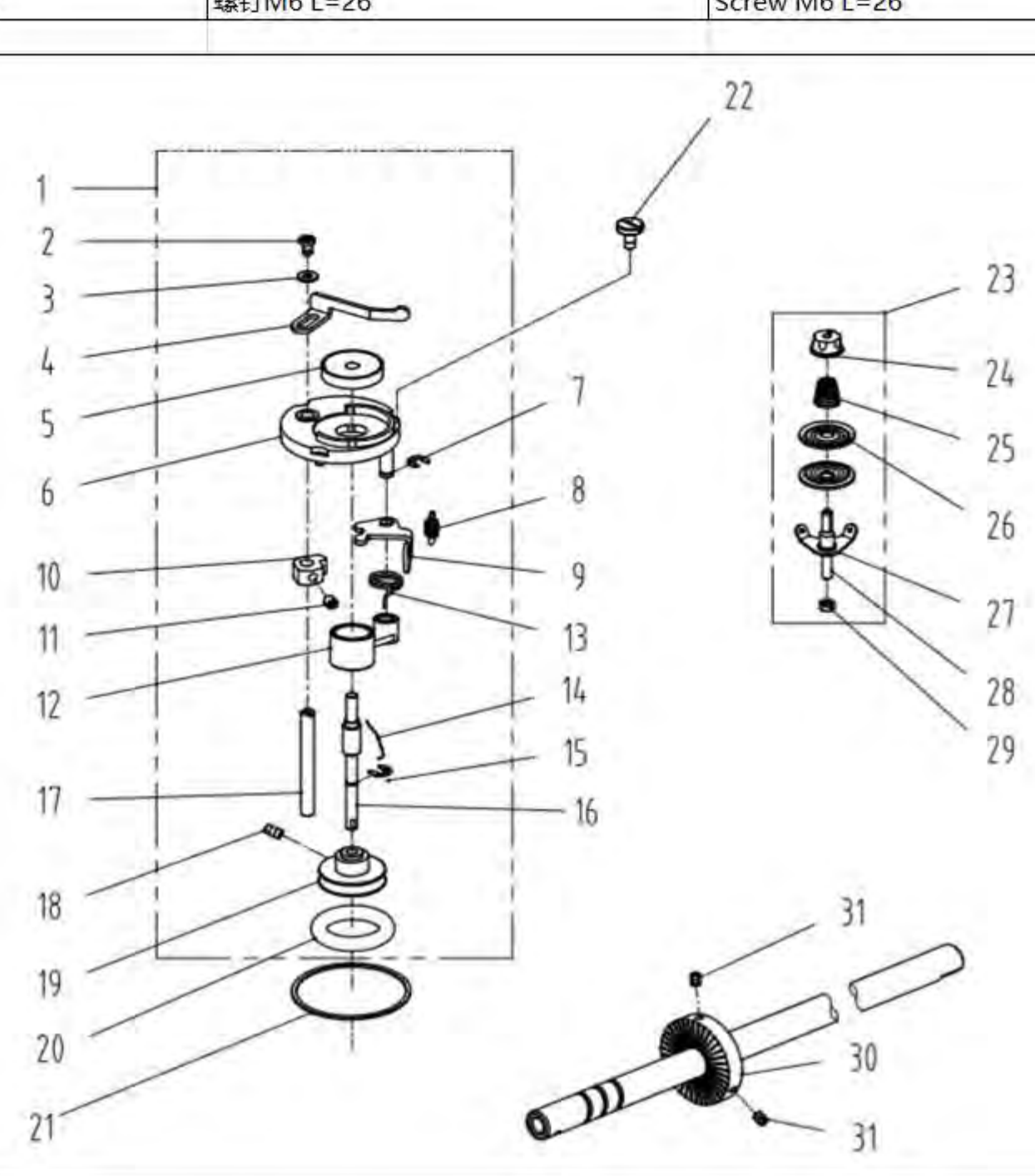

10. 绕线部件/ Winding Components

序号 NO	公司件号 Part NO	名称 PartName	零件描述 Description	数量 Number
1	1383103900	绕线器组件	Bobbin winder asm	1
2	114S11008	螺钉M4 L=6	Screw M4 L=6	1
3	W01142	垫圈4	Washer 4	1
4	10113030	压线控制板	Thread press control plate	1
5	10111120	绕线衬垫	Winding pad	1
6	13831101	绕线器装置主座	Bobbin winder bed	1
7	H05006	开口挡圈5	Snap ring 5	1
8	10127061	复位板拉簧	Spring	1
9	13812110	调节板	Regulating plate	1
10	10110030	绕线凸轮	Bobbin winder cam	1
11	S09045	螺钉M5 L=5	Screw M5 L=5	1
12	1380510600	绕线器连杆组件	Bobbin winder connecting rod	1
13	13827103	满线复位簧	spring	1
14	10127060	弹簧	Spring	1
15	GB/T 896-1986	开口挡圈4	Snap ring 4	1
16	13802111	绕线器主轴	Bobbin winder mian shaft	1
17	13802026	绕线凸轮轴	Bobbin winder cam shaft	1
18	S09103	绕线轮螺钉M4 L=4	Screw M4 L=4	2
19	13831102	绕线轮	Bobbin winder wheel	1
20	O01110	O型圈	Ring	1
21	11422062	密封垫	Washer	1
22	114S11003	螺钉SM3/16"×28 L=10	Screw SM3/16"×28 L=10	3
23	1411300600	底线夹线器	Bobbin thread tension asm	1
24	141S16019	夹线螺母	Thread tension nut	1
25	11427006	小夹线弹簧	Spring	1
26	14112015	夹线板	Thread tension disk	2
27	11413022	夹线过线板	Thread tension guide plate	1
28	112S13004	夹线螺钉	Screw	1
29	114S16001	螺母SM11/64"×40	Nut SM11/64"×40	1
30	11435013	绕线器驱动轮	Driving wheel	1
31	S10009	螺钉M6 L=8	Screw M6 L=8	2

11(1)

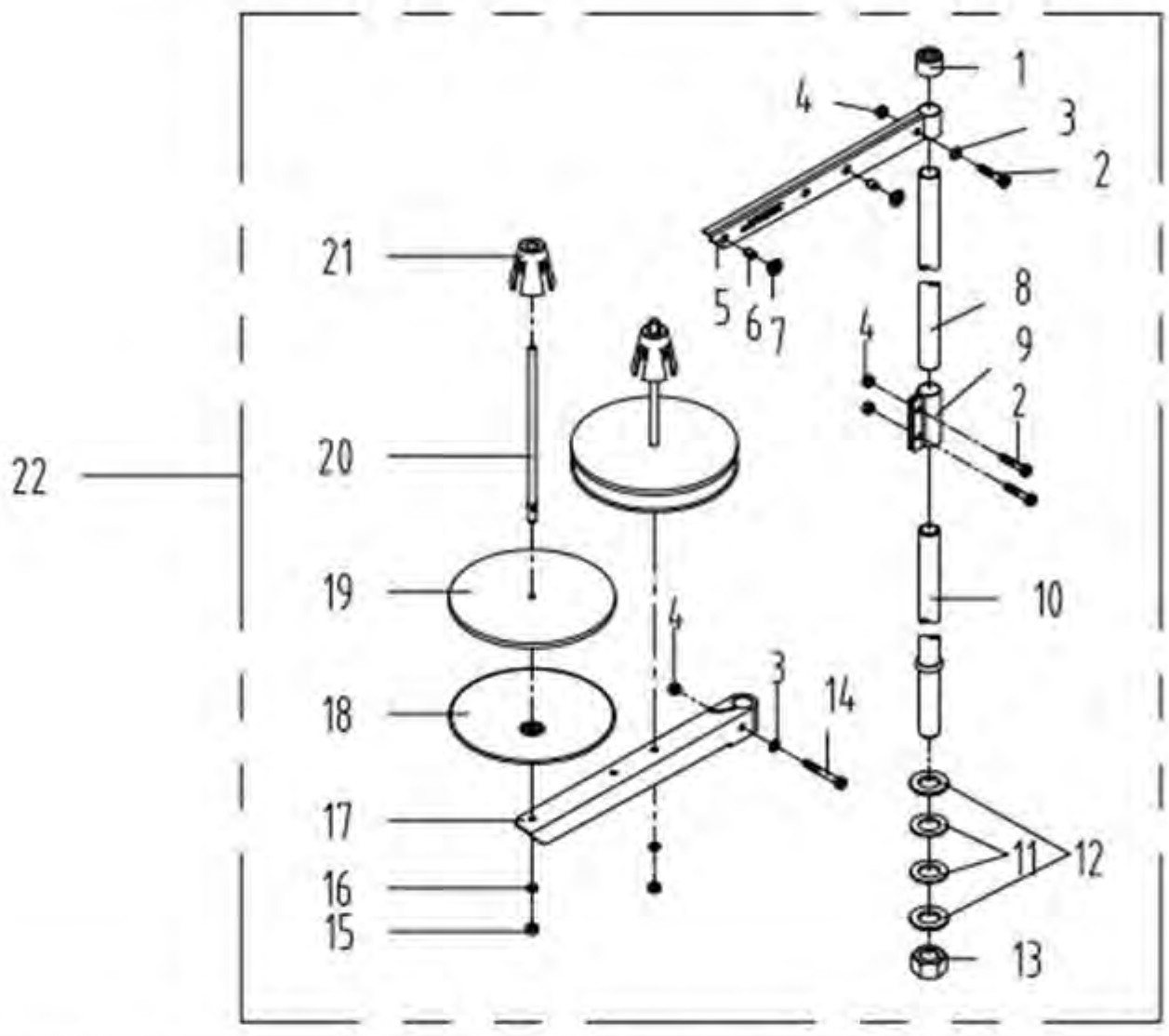

11. 机头附件(1)-线架组件/Machine Head Accessories (1)-Thread Stand Components

序号 NO	公司件号 Part NO	名称 PartName	零件描述 Description	数量 Number
1	20131019	线架杆顶防护橡皮	Spool rest rod rubber cap	1
2	S04050	螺栓M5 L=16	Screw M5 L=16	3
3	W01047	垫圈M5	Washer M5	2
4	N01034	螺母M5	Nut M5	4
5	13831022	上线架过线杆	Spool rest arm upper	1
6	10113011	过线圈(内)	Thread guide ring	2
7	10113010	过线圈(外)	Thread guide ring	2
8	13831019	线架杆上节	Spool rest rod upper	1
9	13831021	线架杆接头	Spool rest rod joint	1
10	13831020	线架杆下节	Spool rest rod lower	1
11	10122106	橡胶垫圈	Spool rest rod rubber ring	2
12	W01052	垫圈M16	Washer M16	2
13	N02008	螺母 M16	Spool rest rod nut M16	1
14	S04051	螺栓M5 L=31.6	Spool rest arm lower screw M5 L=31.6	1
15	N01034	螺母M5	Nut M5	2
16	W03002	弹簧垫圈 5	Spring washer 5	2
17	13831023	下线架过线杆	Spool rest arm lower	1
18	13831024	线盘	Spool rest	2
19	20131010	线盘垫	Spool rest cushion	2
20	20131006	线盘钉	Spool pin	2
21	13831025	线团防松垫	Spool retainer	2
22	1383100300	线架组件	Thread stand asm.	1

11(2)

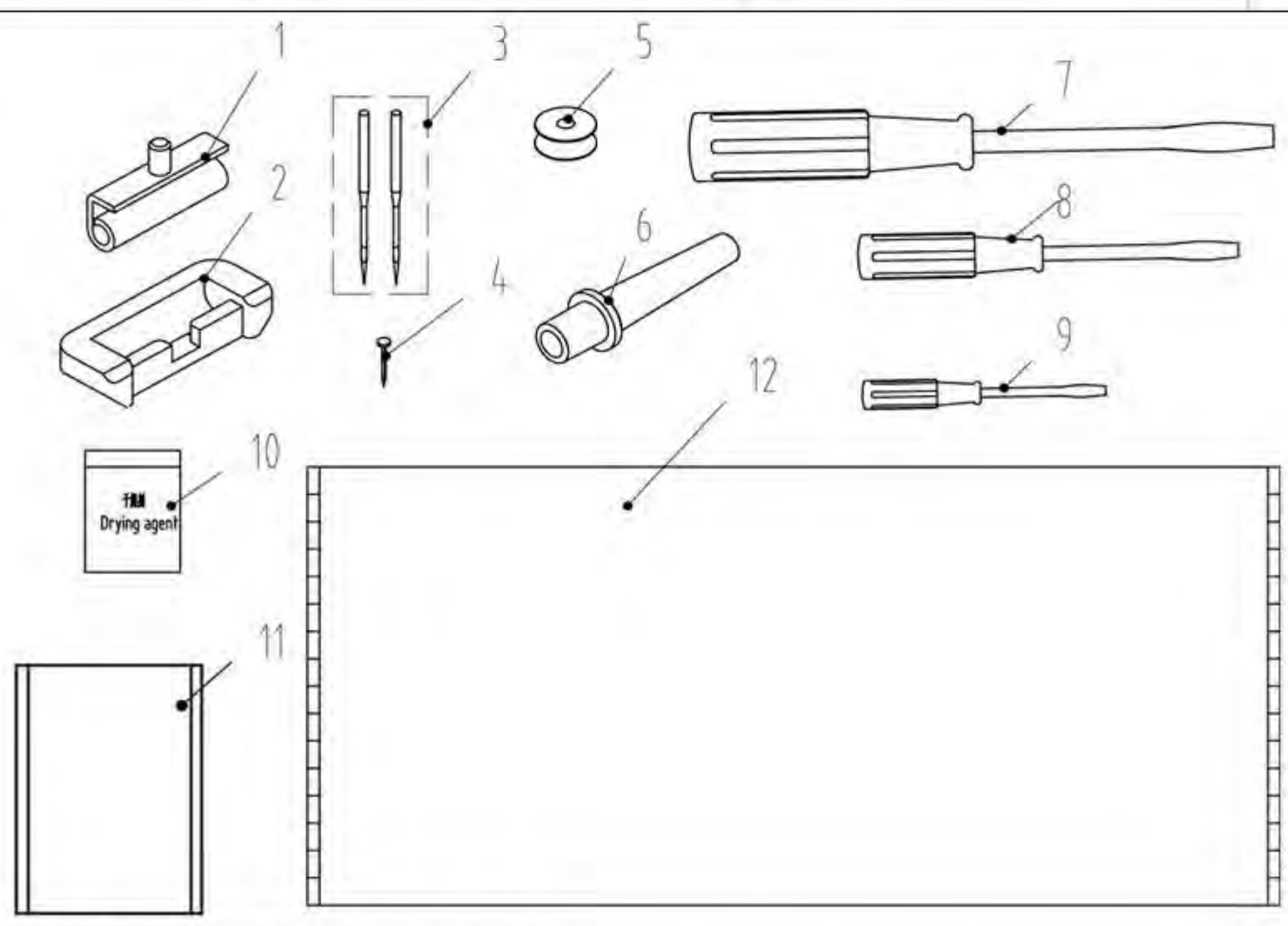

11. 机头附件(2)/Machine Head Accessories (2)

序号 NO	公司件号 Part NO	名称 PartName	零件描述 Description	数量 Number
1	1011203100	机头连接钩组件	Hinge component	2
2	10122060	机头连接钩座	Head connecting rubber cushion	2
3	10117001	机针DB×1 #14	Needle DB×1 #14	4
	10117002	机针DP×5 #21(厚料)	Needle DP×5 #21 (H)	4
4	101S30010	机头连接钩座钉P19	Nail P19	6
5	10118003	梭心	Bobbin	2
	10818501	大梭心(-L)	Big Bobbin (-L)	2
6	115011003	机头支柱	Machine head rest pin	1
7	20731047	螺丝刀(大)	Screw driver (large)	1
8	10131003	螺丝刀(中)	Screw driver (medium)	1
9	10131004	螺丝刀(小)	Screw driver (small)	1
10	113831011	干燥剂(25g)	Drying agent(25g)	1
11	110211011	油袋(400ml)	Oil bag(400ml)	1
12	115031022	防尘罩	Dust cover	1

杰克科技股份有限公司

杰克缝纫机

全球销量遥遥领先

公司地址(Address of Company):
中国浙江省台州市椒江区三甲东海大道东段1008号
NO.1008 , DONGHAI AVENUE EAST，JIAOJIANG DISTRICT,TAIZHOU CITY , ZHEJIANG
邮编(Zip Code)：318000
国内销售部(Domestic Trade Department):
电话(TEL)：0086-0576-88177788 88177789
传真(FAX)：0086-0576-88177758
国贸销售部(International Trade Department):
电话(TEL)：0086-0576-88177782 88177774
传真(FAX)：0086-0576-88177787
服务热线：400-8876858
http://www.chinajack.com

请您扫下杰克服务号

资料如有更改，恕不另行通知，以实物为准。

You will be not informed if the file has been revised.Please set sample as standard.

日期：2022.5.12